Carr Hill Industrial Estate
Doncaster
DN4 8DE
01302 732600 | cva.noreply@cva-auctions.co.uk

VEHICLE INSPECTION REPORT

YA66HKB

Ford Transit 350 2.0 TDCI 130ps

Inspection

Serious Damage?	No

Vehicle

VAT	Plus VAT
V5	Present

Details

Reg. date	20/02/2017	**VIN**	WF0DXXTTGDGY66022	**CAP Below**	£2,725.00
Year	2017	**Body Style**	Dropside	**Gearbox**	MANUAL
Mileage	132,068 Miles Warranted	**MOT Due**	01/09/2026	**Gears**	6
Fuel Type	Diesel	**CAP Clean**	£4,375.00		
Colour	WHITE	**CAP Average**	£3,700.00		

E/MIRRORS

Tyres

NSF	
NSR	
OSF	
OSR	
Spare	

Features

- Air conditioning
- Front electric windows

Photos

YA66 HKB

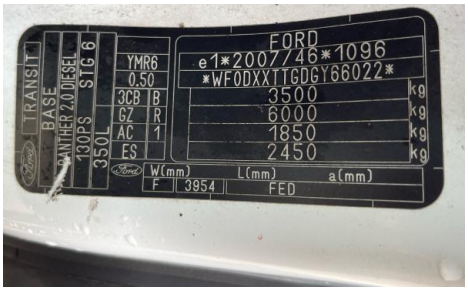
TRANSIT
BASE
PANTHER 2.0 DIESEL
130PS STG 6
350L
YMR6
0.50
3CB B
GZ R
AC 1
ES
FORD
e1*2007/46*1096
WF0DXXTTGDGY66022
3500 kg
6000 kg
1850 kg
2450 kg
W(mm) L(mm) a(mm)
F 3954 FED

6°C
0 mph
132068mls

Condition Check

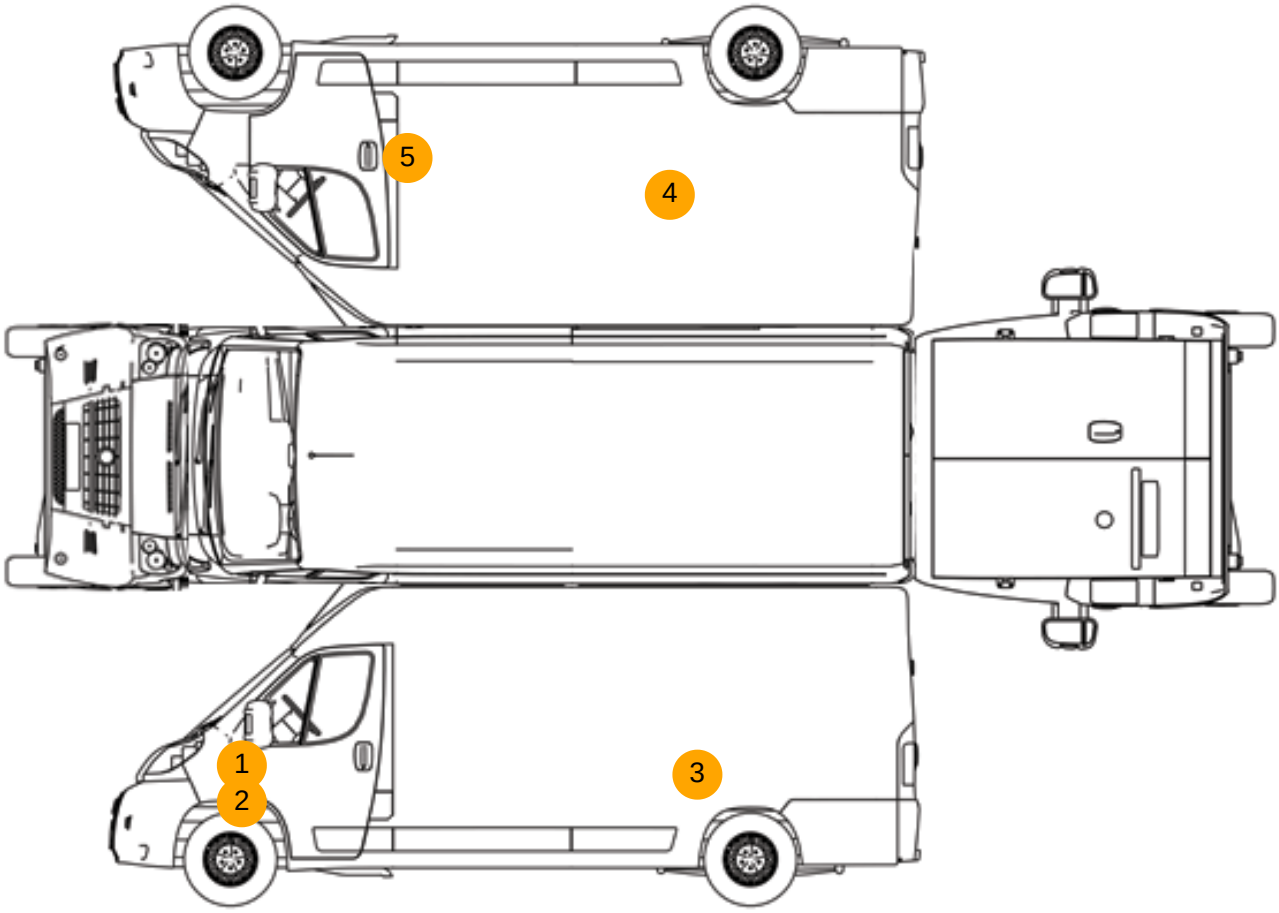

Damage Photos

1: Wing nsf
Dented
Between 10mm + 30mm

2: Wing Front Arch Extension ns
Broken
Replace

3: Qtr Panel nsr
Dented
With Paint Damage

4: Qtr Panel osr
Scratched
Over 25mm Thru Paint

5: Door Lock osf
Broken
Replace

6: Seat Base Cover osf
Holed
Over 3mm

Interior

Carpet Condition	Average	**Upholstery Condition**	Average
Seat Condition	Average	**Odour**	No

Engine Runs	OK	Gearbox 1st and Reverse Test	OK
Brakes	OK	Clutch Slip Test from Static	OK
Parking Brake	OK	Gearbox Static Gear Selection (engine running)	OK
		No Excessive Smoking	OK
EML light illuminated	OK	Oil warning light illuminated	OK
Airbag light illuminated	OK	DPF light illuminated	OK
ABS light illuminated	OK	Service indicator light illuminated	OK