Carr Hill Industrial Estate
Doncaster
DN4 8DE
01302 732600 | cva.noreply@cva-auctions.co.uk

# VEHICLE INSPECTION REPORT

**DK64OYU**

## Mercedes-Benz Actros 1842

### Inspection

| | |
|---|---|
| **Serious Damage?** | No |

### Vehicle

| | |
|---|---|
| **VAT** | Plus VAT |
| **V5** | To Follow |

### Details

| | | | | | |
|---|---|---|---|---|---|
| **Reg. date** | 17/09/2014 | **Colour** | WHITE | **Cab Type** | CLASSICSPACE CAB |
| **Year** | 2014 | **VIN** | WDB9634032L891820 | **Gearbox** | AUTOMATIC |
| **Mileage** | 1,354,954 Km Warranted | **Body Style** | Tractor Unit | **Axle Combi** | 4x2 |
| | | **MOT Due** | 31/08/2026 | **Rear Suspension** | Air |
| **Fuel Type** | Diesel | | | | |

SLIDING 5TH WHEEL, SURROUND CAMERA SYSTEM

### Tyres

| | | | | |
|---|---|---|---|---|
| **NSF** | **NSI1** | **NSI2** | **NSI3** | **NSI4** |
| **OSF** | **OSI1** | **OSI2** | **OSI3** | **OSI4** |
| **Spare** | **NSO1** | **NSO2** | **NSO3** | **NSO4** |
| | **OSO1** | **OSO2** | **OSO3** | **OSO4** |

## Features

- Air conditioning

## Photos

04 0 0km/h
354954.8km
OK
2

DK64 OYU

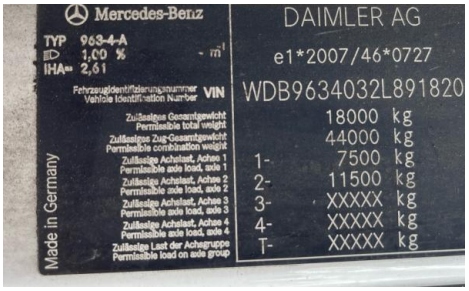
Mercedes-Benz
TYP 963-4-A
1,00 %
IHA= 2,61
Fahrzeugidentifizierungsnummer
Vehicle Identification Number VIN
Zulässiges Gesamtgewicht
Permissible total weight
Zulässiges Zug-Gesamtgewicht
Permissible combination weight
Zulässige Achslast, Achse 1
Permissible axle load, axle 1
Zulässige Achslast, Achse 2
Permissible axle load, axle 2
Zulässige Achslast, Achse 3
Permissible axle load, axle 3
Zulässige Achslast, Achse 4
Permissible axle load, axle 4
Zulässige Last der Achsgruppe
Permissible load on axle group
Made in Germany
DAIMLER AG
e1*2007/46*0727
WDB9634032L891820
18000 kg
44000 kg
1- 7500 kg
2- 11500 kg
3- XXXXX kg
4- XXXXX kg
T- XXXXX kg

# Condition Check

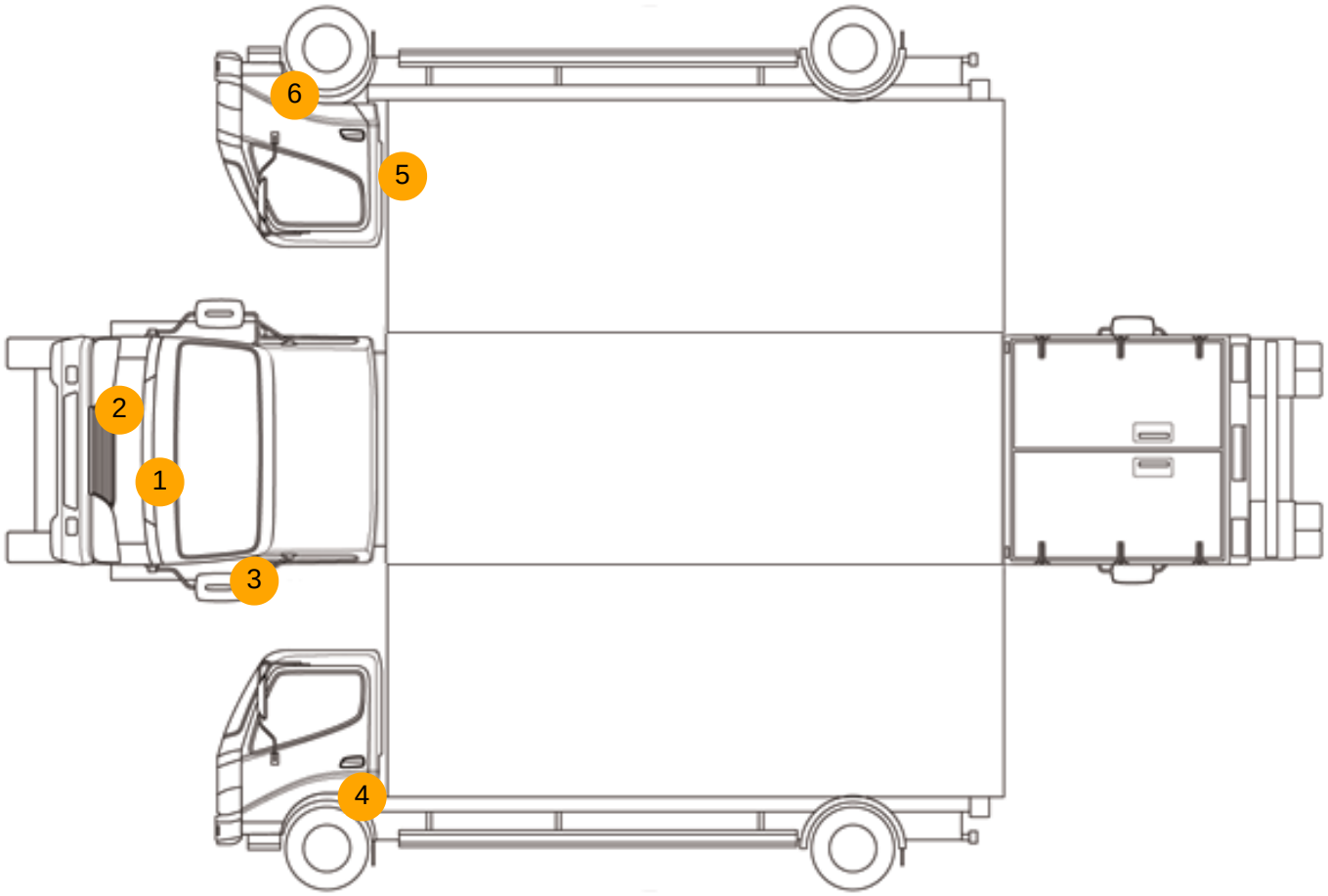


## Damage Photos

1: Bonnet
Chipped
Multiple Chips

2: Fog Lamp Surround ns
Broken
Replace

3: Door Mirror Assy nsf
Scuffed (Unpainted)
Over 100mm

4: Wing Front Arch Extension ns
Scratched (Painted)
Over 25mm Thru Paint

5: Door osf
Chipped
Edge Chip

6: Wing Front Arch Extension os
Scratched (Painted)
Over 25mm Thru Paint

7: Seat Base Cover osf
Holed
Over 3mm

**Interior**

| | | | |
|---|---|---|---|
| **Carpet Condition** | Average | **Upholstery Condition** | Average |
| **Seat Condition** | Average | **Odour** | - |

| | | | |
|---|---|---|---|
| Engine Runs | OK | Gearbox 1st and Reverse Test | OK |
| Brakes | OK | Clutch Slip Test from Static | OK |
| Parking Brake | OK | Gearbox Static Gear Selection (engine running) | OK |
| | | No Excessive Smoking | OK |
| EML light illuminated | OK | Oil warning light illuminated | OK |
| Airbag light illuminated | OK | DPF light illuminated | OK |
| ABS light illuminated | OK | Service indicator light illuminated | OK |