Carr Hill Industrial Estate
Doncaster
DN4 8DE
01302 732600 | cva.noreply@cva-auctions.co.uk

VEHICLE INSPECTION REPORT

LL15UVJ

Mercedes-Benz Econic

Non Runner

Inspection

Serious Damage?	No

Vehicle

VAT	Plus VAT
V5	To Follow

Details

Reg. date	21/07/2015	**Colour**	WHITE	**Gearbox**	AUTOMATIC
Year	2015	**VIN**	WDB9560632V239227	**Axle Combi**	6x2
Mileage	Not Showing	**Body Style**	Refuse Collector	**Rear Suspension**	Steel
Fuel Type	Diesel	**Cab Type**	CREW CAB		

NON-RUNNER, DOES NOT POWER UP, PARTIALLY STRIPPED FAUN VARIOPRESS BODY, SINGLE LIFT, MOT SHOWS 217,056KM 16/07/2024

Tyres

NSF	**NSI1**	**NSI2**	**NSI3**	**NSI4**
OSF	**OSI1**	**OSI2**	**OSI3**	**OSI4**
Spare	**NSO1**	**NSO2**	**NSO3**	**NSO4**
	OSO1	**OSO2**	**OSO3**	**OSO4**

Photos

FAUN
VARIOPRES

90 km/h
DAIMLER AG

REPLACEMENT

Condition Check

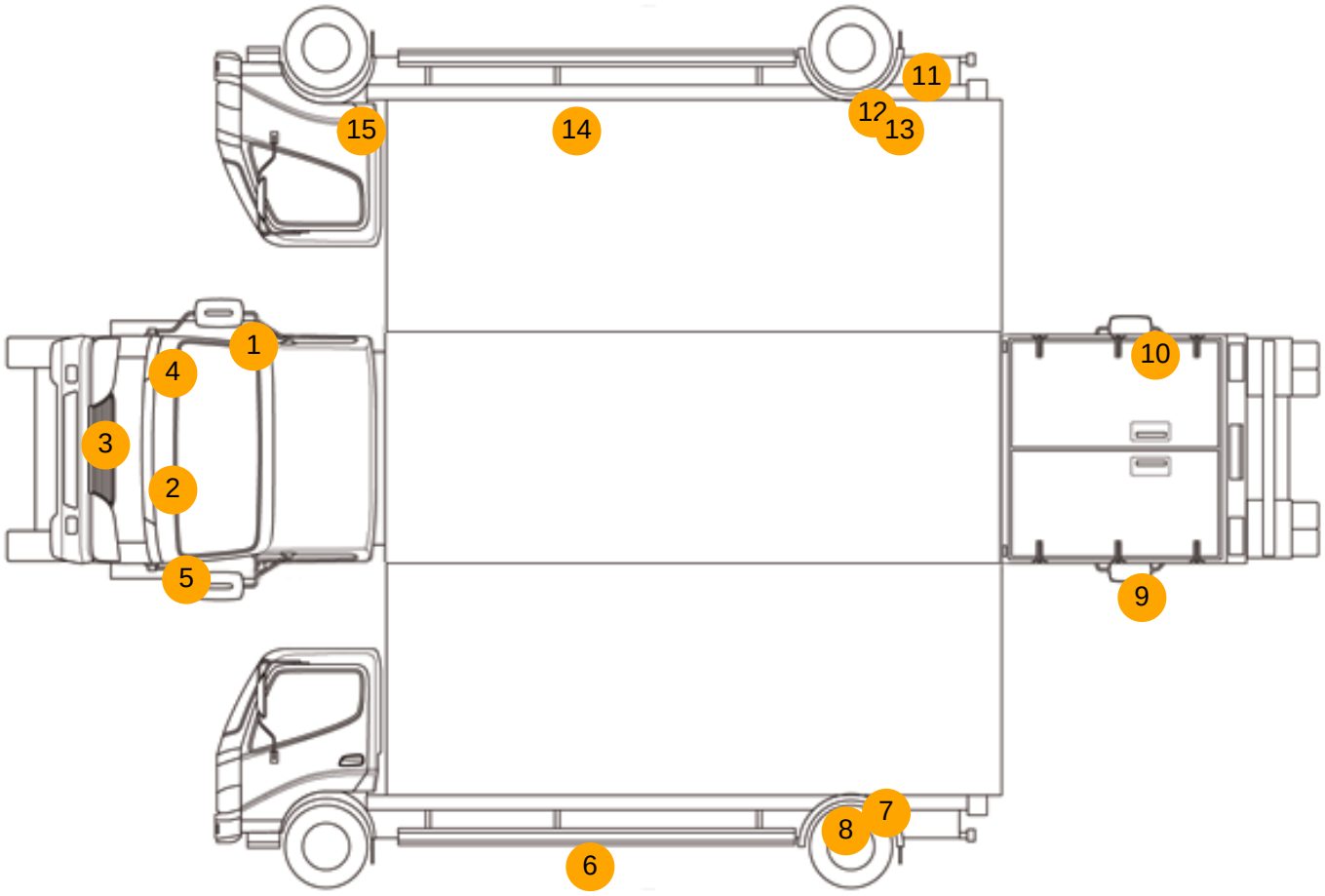

Damage Photos

1: Door Mirror Assy osf
Missing
Replace

2: Bonnet
Missing
Replace

3: Number Plate Front
Missing
Replace

4: Flasher Side Repeater os
Missing
Replace

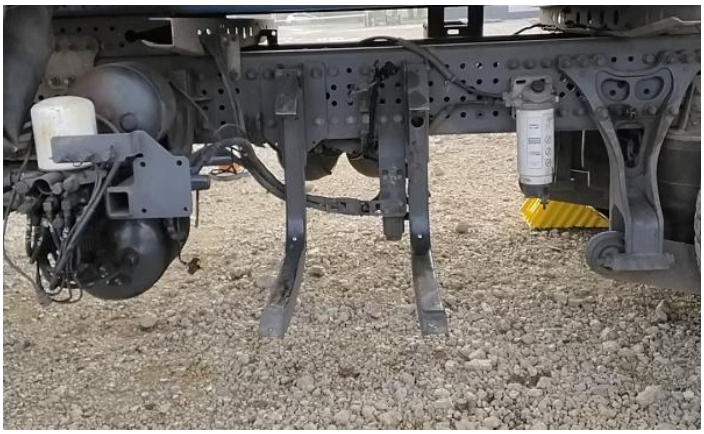

5: Flasher Side Repeater ns
Missing
Replace

6: Fuel Flap
Missing
Replace

7: Wheel nsr
Missing
Replace

8: Wheel Trim nsr
Missing
Replace

9: Lamp nsr
Missing
Replace

10: Lamp osr
Missing
Replace

11: Wheel osr
Missing
Replace

12: Wheel osr
Missing
Replace

13: Wheel Trim osr
Missing
Replace

14: Fuel Flap
Missing
Replace

15: Door osf
Missing
Replace

16: Centre Console Front
Missing
Replace

Interior

Carpet Condition	Poor	**Upholstery Condition**	Poor
Seat Condition	Poor	**Odour**	-
Engine Runs	Fault		