Carr Hill Industrial Estate
Doncaster
DN4 8DE
01302 732600 | cva.noreply@cva-auctions.co.uk

VEHICLE INSPECTION REPORT

DG67EFP

Mercedes-Benz Actros 1824

Inspection

Serious Damage?	No

Vehicle

VAT	Plus VAT
V5	Buyer To Apply

Details

Reg. date	31/12/2017	**VIN**	WDB96300320220332	**Axle Combi**	4x2
Year	2017	**Body Style**	Curtainside	**Rear Suspension**	Air
Mileage	513,305 Km Not Warranted	**MOT Due**	31/03/2026	**Rear Doors**	Barn
Fuel Type	Diesel	**Cab Type**	STREAMSPACE CAB (2.3M, 170MM)	**Tail Lift**	Tuckaway
Colour	WHITE	**Gearbox**	AUTOMATIC		

SEVERE ENGINE MISFIRE, WARNING LIGHT ON DASH

Tyres

NSF	**NSI1**	**NSI2**	**NSI3**	**NSI4**
OSF	**OSI1**	**OSI2**	**OSI3**	**OSI4**
Spare	**NSO1**	**NSO2**	**NSO3**	**NSO4**
	OSO1	**OSO2**	**OSO3**	**OSO4**

Features

- Bluetooth connection
- Front electric windows
- Cruise control
- Central locking
- Digital radio
- Cloth seat trim
- Air conditioning

Photos

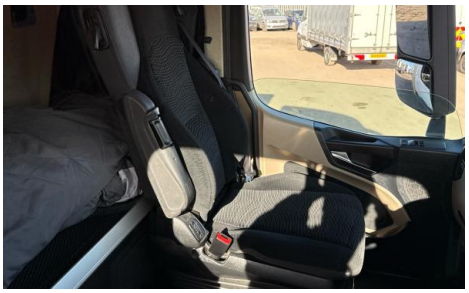

VDO
27 0km/h
513305.2km
OK

D
N
R
M
A

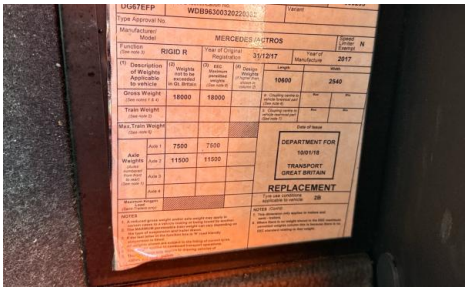
DG67EFP
MERCEDES-BENZ ACTROS
RIGID R
31/12/17
2017
18000
18000
10600
2540
7500
7500
11500
11500
DEPARTMENT FOR
TRANSPORT
GREAT BRITAIN
REPLACEMENT

Mercedes-Benz
DAIMLER AG
e1*2007/46*0726
WDB9630032022033 2
18000 kg
32000 kg
1- 7500 kg
2- 11500 kg
3- XXXXX kg
4- XXXXX kg
T- XXXXX kg
Made in Germany

DG67 EFP

Condition Check

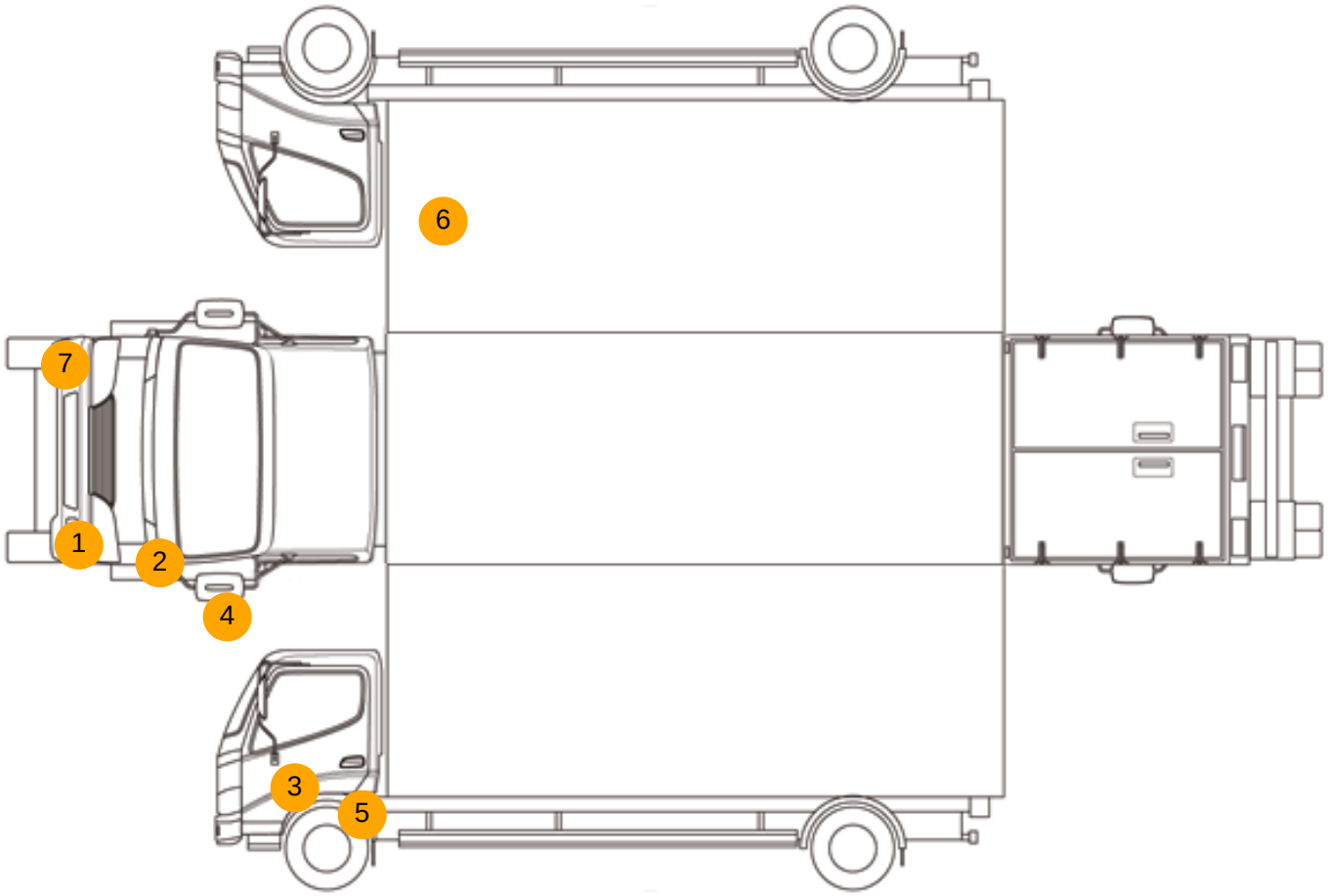

Damage Photos

1: Bumper Front Moulding
Broken
Replace

2: Panel Front
Cracked
Replace

3: Door nsf
Dented
With Paint Damage

4: Door Mirror Assy nsf
Broken
Replace

5: Wing nsf
Scratched
Over 25mm Thru Paint

6: Qtr Panel osr
Dented
With Paint Damage

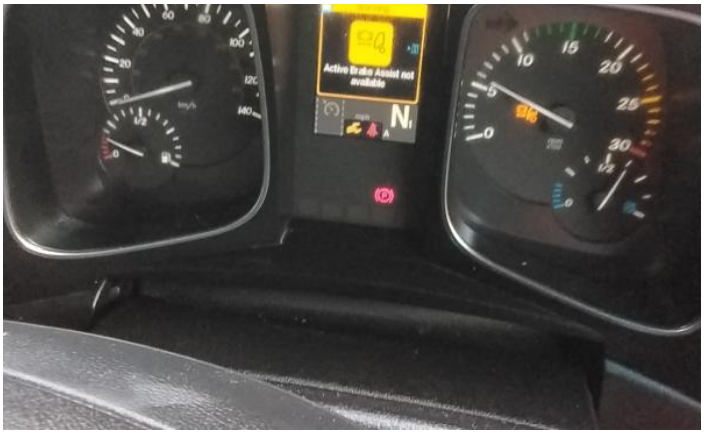

7: Bumper Front Moulding
Broken
Replace

8: Dash Warning Lights
Displayed
No Action

9: Dash Warning Lights
Displayed
No Action

Interior

Carpet Condition	OK	**Upholstery Condition**	OK
Seat Condition	OK	**Odour**	-

Engine Runs	Fault	No Excessive Smoking	OK
EML light illuminated	OK	DPF light illuminated	OK
ABS light illuminated	Fault	Service indicator light illuminated	Fault