COMMERCIAL VEHICLE AUCTIONS LTD
THE UK'S MOST ESTABLISHED COMMERCIAL VEHICLE AUCTIONEERS

Carr Hill Industrial Estate
Doncaster
DN4 8DE
01302 732600 | cva.noreply@cva-auctions.co.uk

VEHICLE INSPECTION REPORT

CE74YDD

Vauxhall Vivaro F2900 1.5 TURBO D 120PS PRIME

Inspection

Serious Damage?	No

Vehicle

VAT	Plus VAT
V5	Buyer To Apply
Cap Id	58180
Cap Code	VAVI15L2P VDTM2 4 L

Details

Location	Doncaster	**GVW**	2830kg	**CAP Average**	£12,600.00
Reg. date	01/09/2024	**Colour**	WHITE	**CAP Below**	£11,150.00
Year	2024	**VIN**	VXEVJYHV4R7840921	**Gearbox**	MANUAL
Mileage	26,470 Miles Not Warranted	**Body Style**	Panel Van LWB	**Gears**	6
Fuel Type	DIESEL	**CAP Clean**	£13,400.00		

AD-BLUE, TWIN SIDE LOAD DOOR, E/ MIRRORS

Tyres

NSF	
NSR	
OSF	
OSR	
Spare	

Features

- Bluetooth connection
- Digital radio
- Passenger airbag
- Cruise control
- Air conditioning
- Central locking
- Rear parking sensor
- Front electric windows
- Cloth seat trim
- Auxiliary input socket
- Drivers airbag

Photos











90
°C
mph
26470 mi

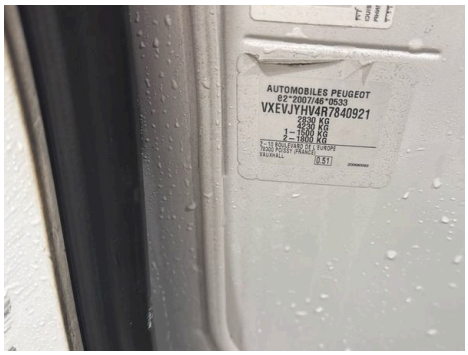
AUTOMOBILES PEUGEOT
VXEVJYHV4R7840921







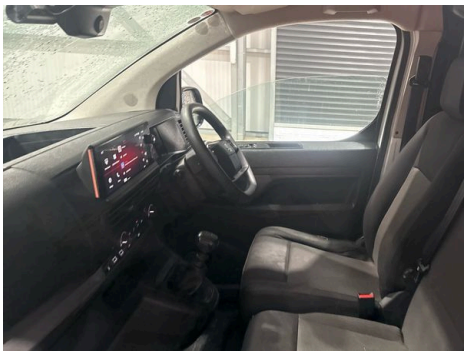

AIRBAG







Condition Check

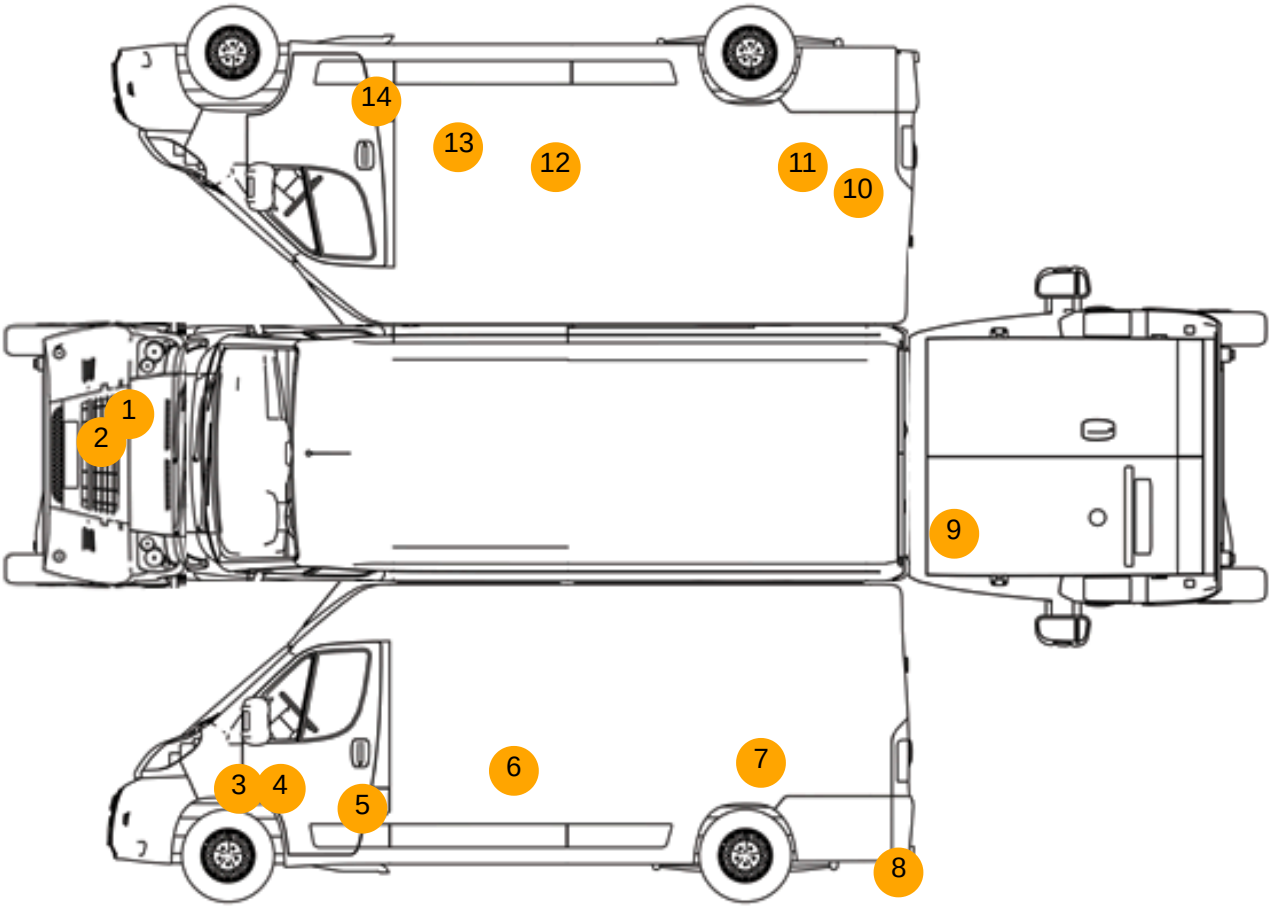

Damage Photos



1: Panel Front
Scratched
Over 25mm Thru Paint



2: Bumper Front
Scratched
Over 100mm Thru Paint



3: Wing nsf
Dented
With Paint Damage



4: Wing nsf
Dented
Over 30mm



5: Door nsf
Dented
With Paint Damage



6: Qtr Panel nsr
Dented
Over 30% Of Panel



7: Qtr Panel nsr
Dented
With Paint Damage



8: Qtr Panel Moulding ns
Scuffed (Unpainted)
Over 100mm



9: Door nsr
Dented
With Paint Damage



10: Qtr Panel osr
Dented
Over 30mm



11: Qtr Panel osr
Scratched
Over 25mm Thru Paint



12: Qtr Panel osr
Scratched
Over 25mm Thru Paint



13: Qtr Panel osr
Scratched
Over 25mm Thru Paint



14: Door Moulding osf
Missing
Replace



15: Seat Base Cover osf
Torn
Over 3mm



16: Seat Base Cover nsf
Soiled
Heavy

Interior

Carpet Condition	OK	**Upholstery Condition**	OK
Seat Condition	Poor	**Odour**	No

Engine Runs	OK	No Excessive Smoking	OK
EML light illuminated	OK	Oil warning light illuminated	OK
Airbag light illuminated	OK	DPF light illuminated	OK
ABS light illuminated	OK	Service indicator light illuminated	OK