COMMERCIAL VEHICLE AUCTIONS LTD
THE UK'S MOST ESTABLISHED COMMERCIAL VEHICLE AUCTIONEERS

Carr Hill Industrial Estate
Doncaster
DN4 8DE
01302 732600 | cva.noreply@cva-auctions.co.uk

VEHICLE INSPECTION REPORT

DG23ZZN

Vauxhall Vivaro F2900 1.5D 100PS SPORTIVE

Inspection

Serious Damage?	No

Vehicle

VAT	Plus VAT
V5	Buyer To Apply
Cap Id	44322
Cap Code	VAVI15291SVDTM2 3 L

Details

Location	Doncaster	**GVW**	2830kg	**CAP Average**	£9,650.00
Reg. date	08/03/2023	**Colour**	WHITE	**CAP Below**	£8,325.00
Year	2023	**VIN**	VXEVBYHRMN7076373	**Gearbox**	MANUAL
Mileage	37,578 Miles Not Warranted	**Body Style**	Panel Van L2	**Gears**	6
Fuel Type	DIESEL	**CAP Clean**	£10,450.00		

SIDE LOAD DOOR & REAR O/S DOOR INOP, WARNING LIGHTS ON DASH AD-BLUE, SIDE LOAD DOOR, E/ MIRRORS

Tyres

NSF	
NSR	Punctured
OSF	
OSR	
Spare	

Features

- Bluetooth connection
- Digital radio
- Passenger airbag
- Cruise control
- Air conditioning
- Central locking
- Rear parking sensor
- Front electric windows
- Cloth seat trim
- Auxiliary input socket
- Drivers airbag

Photos








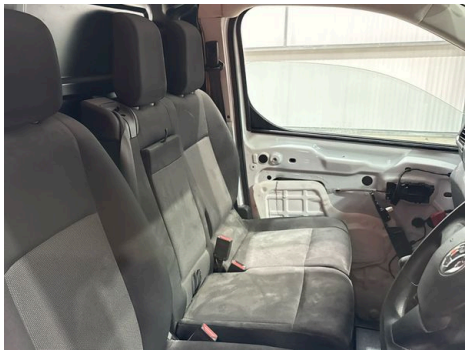


0
037578 MI



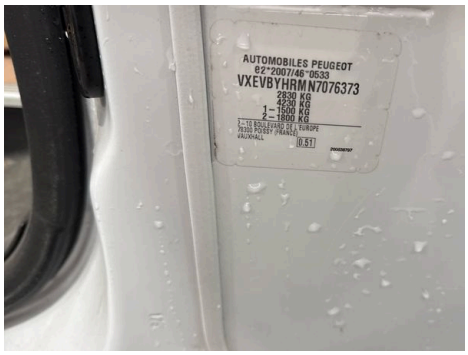
AUTOMOBILES PEUGEOT
VXEVBYHRMN7076373
2830 KG
4230 KG
1-1500 KG
2-1800 KG













Condition Check

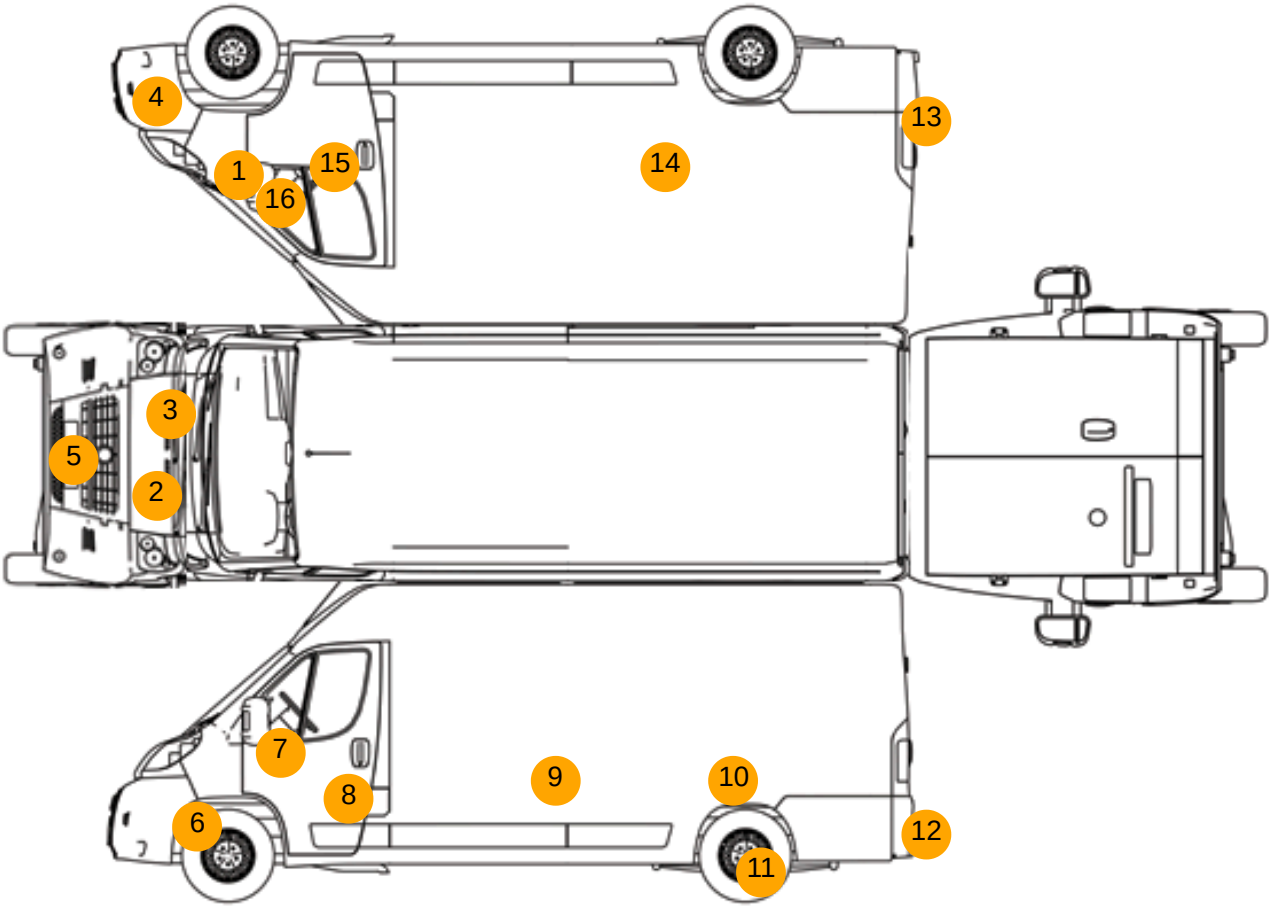

Damage Photos



1: Wing osf
Dented
With Paint Damage



2: Bonnet
Dented
With Paint Damage



3: Panel Front
Scratched
Over 25mm Thru Paint



4: Bumper Front
Scratched
Over 100mm Thru Paint



5: Bumper Front
Scratched
Over 100mm Thru Paint



6: Bumper Front
Scratched
Over 100mm Thru Paint



7: Door Mirror Assy nsf
Missing
Replace



8: Door nsf
Dented
Over 30% Of Panel



9: Qtr Panel nsr
Dented
Over 30% Of Panel



10: Qtr Panel nsr
Dented
With Paint Damage



11: Other
N/A
N/A



12: Qtr Panel Moulding ns
Scratched (Painted)
Over 25mm Thru Paint



13: Qtr Panel Moulding os
Scratched (Painted)
Over 25mm Thru Paint



14: Qtr Panel osr
Scratched
Over 25mm Thru Paint



15: Door osf
Scratched
Over 25mm Thru Paint



16: Door Mirror Assy osf
Scratched (Painted)
Over 25mm Thru Paint



17: Seat Base Cover osf
Soiled
Heavy



18: Seat Base Cover nsf
Soiled
Heavy



19: Door Pad nsf
Missing
Replace



20: Dash Warning Lights
Displayed
No Action

Interior

Carpet Condition	OK	**Upholstery Condition**	Poor
Seat Condition	Poor	**Odour**	Yes

Engine Runs	OK	No Excessive Smoking	Fault
EML light illuminated	Fault	Oil warning light illuminated	OK
Airbag light illuminated	OK	DPF light illuminated	OK
ABS light illuminated	OK	Service indicator light illuminated	Fault