COMMERCIAL VEHICLE AUCTIONS LTD
THE UK'S MOST ESTABLISHED COMMERCIAL VEHICLE AUCTIONEERS

Carr Hill Industrial Estate
Doncaster
DN4 8DE
01302 732600 | cva.noreply@cva-auctions.co.uk

VEHICLE INSPECTION REPORT

LR73ZXX

Maxus Deliver 9 2.0 D20 150

Non Runner

Inspection

Serious Damage?	No

Vehicle

VAT	Plus VAT
V5	Buyer To Apply
Cap Id	55901
Cap Code	MXD920LW509DTM2 L

Details

Location	Livingston	**GVW**	3500kg	**CAP Clean**	£8,550.00
Reg. date	16/10/2023	**Colour**	WHITE	**CAP Average**	£7,925.00
Year	2023	**VIN**	LSH14J7C1PA822499	**CAP Below**	£6,825.00
Mileage	79,927 Miles Not Warranted	**Body Style**	Panel Van LWB	**Gearbox**	MANUAL
Fuel Type	DIESEL	**MOT Due**	Expired	**Gears**	6

NON-RUNNER, STARTS DOES NOT DRIVE, NO CLUTCH, WARNING LIGHTS ON DASH SIDE LAOD DOOR, E/MIRRORS, AD-BLUE.

Tyres

NSF	
NSR	
OSF	
OSR	
Spare	

Features

- Rear parking sensor
- Central locking
- Radio/CD
- Air conditioning
- Front electric windows

Photos










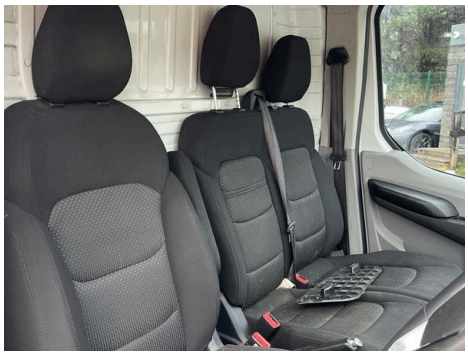


SAIC MAXUS Automotive Co.,Ltd.
64*2018/858*00074
LSH14J7C1PA822499
3500 kg
6000 kg
1- 1950 kg
2- 1900 kg








Condition Check

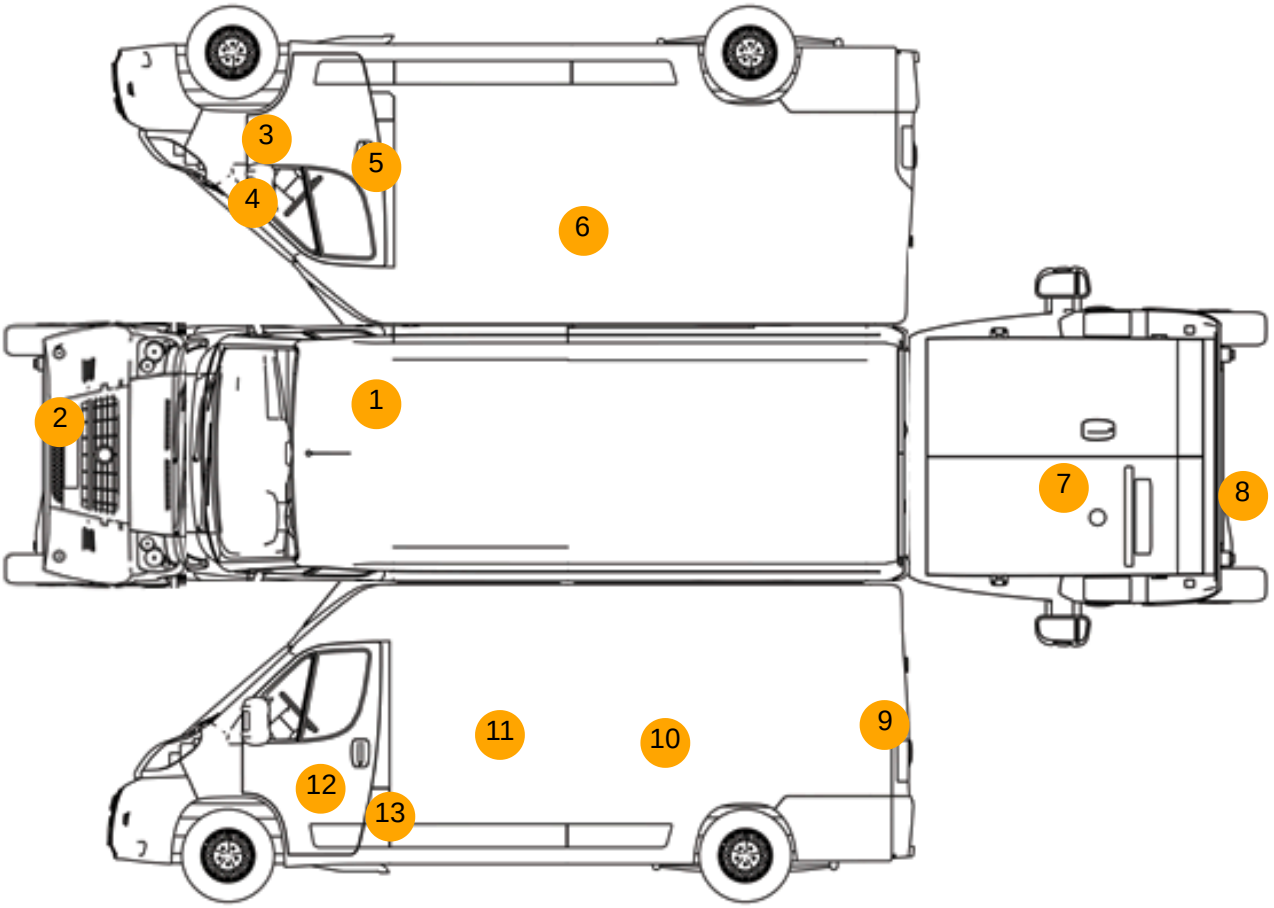

Damage Photos



1: Seat Base Cover osf
Torn
Over 3mm



2: Carpets Front
Torn
Over 10mm



3: Sill os
Rusted
Over 5mm



4: Roof
Dented
Over 30% Of Panel
DENTED AND VERY POOR PREVIIOUS REPAIR



5: Bumper Front
Dented
With Paint Damage



6: Wing osf
Dented
With Paint Damage



7: Door Mirror Assy osf
Missing
Replace



8: Door osf
Dented
Over 30mm



9: Qtr Panel osr
Dented
With Paint Damage



10: Tailgate
Dented
With Paint Damage



11: Bumper Rear
Dented
Over 30mm



12: D Post ns
Dented
Over 30mm



13: Qtr Panel nsr
Dented
With Paint Damage



14: Door nsr
Dented
With Paint Damage



15: Door nsf
Dented
With Paint Damage



16: Fuel Flap
Missing
Replace

Interior

Carpet Condition	Poor	**Upholstery Condition**	Average
Seat Condition	Poor	**Odour**	No

Engine Runs	OK	Gearbox 1st and Reverse Test	Fault
Brakes	OK	Clutch Slip Test from Static	Fault
Turbo Boosting	OK	Gearbox Static Gear Selection (engine running)	Fault
Parking Brake	OK	No Excessive Smoking	OK
EML light illuminated	OK	Oil warning light illuminated	OK
Airbag light illuminated	OK	DPF light illuminated	OK
ABS light illuminated	OK	Service indicator light illuminated	Fault
Windows	OK	Radio	OK
		Steering	Fault