COMMERCIAL VEHICLE AUCTIONS LTD
THE UK'S MOST ESTABLISHED COMMERCIAL VEHICLE AUCTIONEERS

Carr Hill Industrial Estate
Doncaster
DN4 8DE
01302 732600 | cva.noreply@cva-auctions.co.uk

VEHICLE INSPECTION REPORT

LR73ZYB

Maxus Deliver 9 2.0 D20 150

Inspection

Serious Damage?	No

Vehicle

VAT	Plus VAT
V5	Buyer To Apply
Cap Id	55901
Cap Code	MXD920LW509DTM2 L

Details

Location	Doncaster	**GVW**	3500kg	**CAP Clean**	£9,650.00
Reg. date	16/10/2023	**Colour**	WHITE	**CAP Average**	£8,925.00
Year	2023	**VIN**	LSH14J7C9PA822489	**CAP Below**	£7,700.00
Mileage	57,020 Miles Not Warranted	**Body Style**	Panel Van LWB	**Gearbox**	MANUAL
Fuel Type	DIESEL	**MOT Due**	Expired	**Gears**	6

SIDE LOAD DOOR, E/MIRRORS, AD-BLUE.

Tyres

NSF	
NSR	
OSF	
OSR	
Spare	

Features

- Rear parking sensor
- Air conditioning
- Front electric windows
- Central locking

Photos




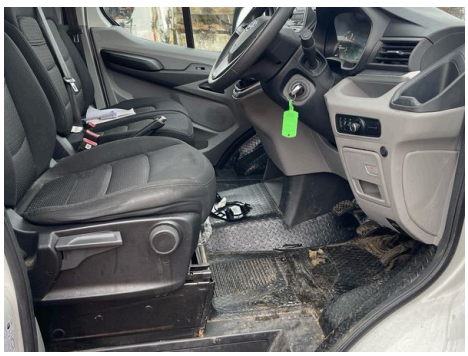








SAIC MAXUS Automotive Co.,Ltd
e4*2018/858*00074
LSH14J7C9PA822489
3500 kg
6000 kg
1- 1950 kg
2- 1900 kg
SAIC MAXUS Automotive Co., Ltd.
TYPE : SV63C



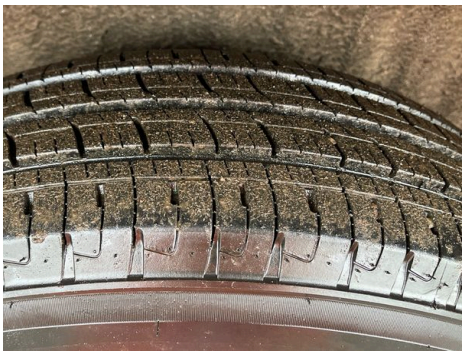





Condition Check

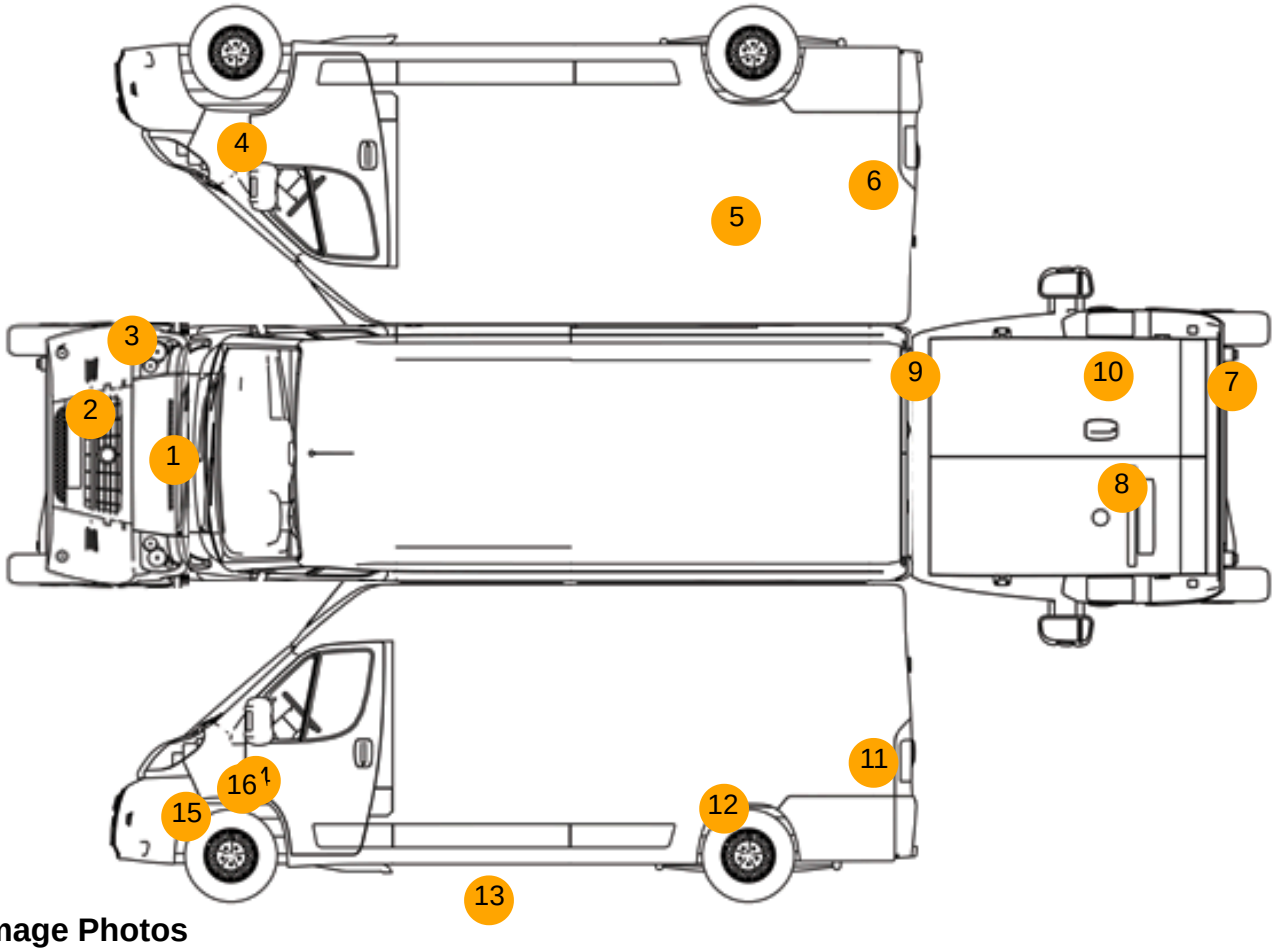

Damage Photos

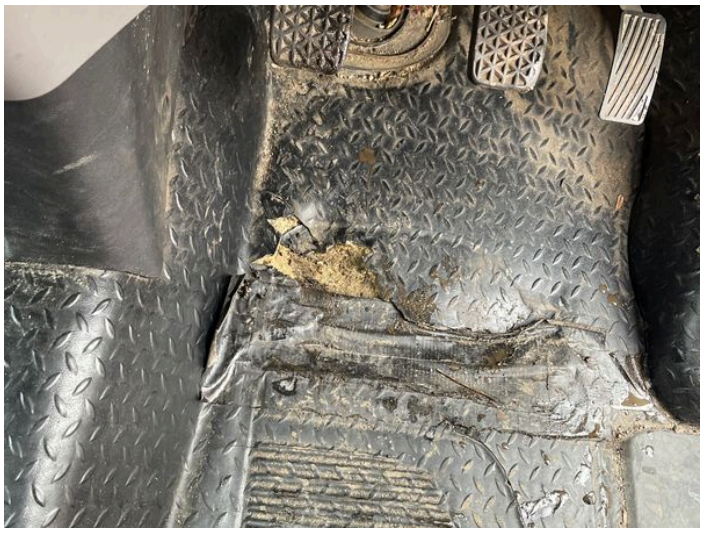

1: Carpets Front
Holed
Over 3mm



2: Bonnet
Chipped
Multiple Chips



3: Bumper Front
Chipped
Multiple Chips



4: Bumper Front
Insecure
Action Required

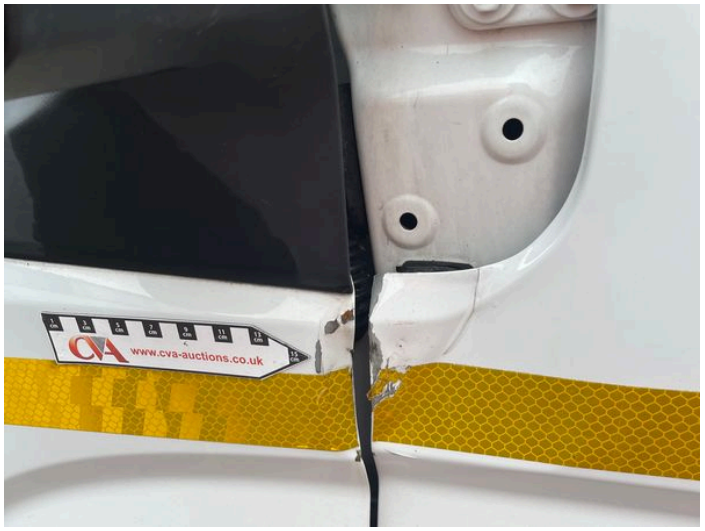

5: Wing osf
Dented
With Paint Damage



6: Qtr Panel osr
Dented
Over 30mm



7: Qtr Panel osr
Dented
With Paint Damage



8: Tailgate
Dented
With Paint Damage



9: Badgedecal Rear
Missing
Replace



10: Roof
Dented
With Paint Damage



11: Tailgate
Dented
With Paint Damage



12: Qtr Panel nsr
Dented
With Paint Damage



13: Qtr Panel nsr
Dented
With Paint Damage



14: Sill ns
Dented
Over 30mm



15: Wing nsf
Dented
With Paint Damage



16: Bumper Front
Cracked
Over 25mm



17: Wing nsf
Dented
With Paint Damage

Interior

Carpet Condition	Poor	**Upholstery Condition**	Average
Seat Condition	Average	**Odour**	No

Engine Runs	OK	Gearbox 1st and Reverse Test	OK
Brakes	OK	Clutch Slip Test from Static	OK
Turbo Boosting	OK	Gearbox Static Gear Selection (engine running)	OK
Parking Brake	OK	No Excessive Smoking	OK
EML light illuminated	OK	Oil warning light illuminated	OK
Airbag light illuminated	OK	DPF light illuminated	OK
ABS light illuminated	OK	Service indicator light illuminated	OK