COMMERCIAL VEHICLE AUCTIONS LTD
THE UK'S MOST ESTABLISHED COMMERCIAL VEHICLE AUCTIONEERS

Carr Hill Industrial Estate
Doncaster
DN4 8DE
01302 732600 | cva.noreply@cva-auctions.co.uk

VEHICLE INSPECTION REPORT

MT72JNK

Daf LF 210

Inspection

Serious Damage?	No

Vehicle

VAT	Plus VAT
V5	Present
Cap Code	999900

Details

Location	Doncaster	**GVW**	12000kg	**MOT Due**	30/11/2027
Reg. date	07/11/2022	**Colour**	WHITE	**Cab Type**	CREW CAB
Year	2022	**VIN**	XLRAEL1500L518098	**Gearbox**	MANUAL
Mileage	185,267 Km Not Warranted	**Body Style**	Tilt & Slide	**Axle Combi**	4x2
Fuel Type	DIESEL	**Service history**	None	**Rear Suspension**	Air

CASSFAB BODY, SPEC LIFT, WINCH

Tyres

NSF	**NSI1**	**NSI2**	**NSI3**	**NSI4**
OSF	**OSI1**	**OSI2**	**OSI3**	**OSI4**
Spare	**NSO1**	**NSO2**	**NSO3**	**NSO4**
	OSO1	**OSO2**	**OSO3**	**OSO4**

Features

- Bluetooth connection
- Front electric windows
- Cruise control
- Central locking
- Digital radio
- Cloth seat trim
- Air conditioning

Photos








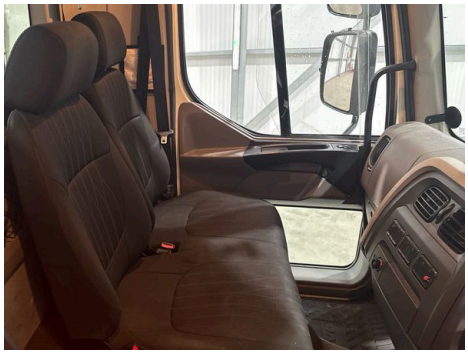

15:00 0km/h
185267.2km


DAF ILF 210 FA
Plate
DEPARTMENT FOR
TRANSPORT
GREAT BRITAIN

DAF TRUCKS N.V.
e5*2007/46*1037*
XLRAEL1500L518098
DAF

DAF

DAF
NT72 JNK


CASSFAB







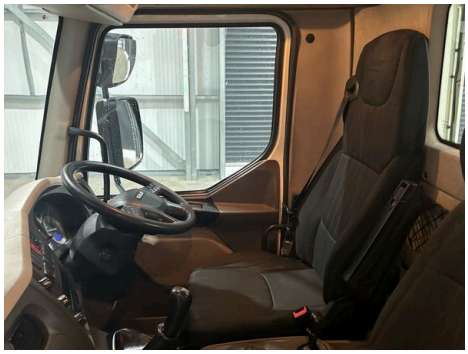



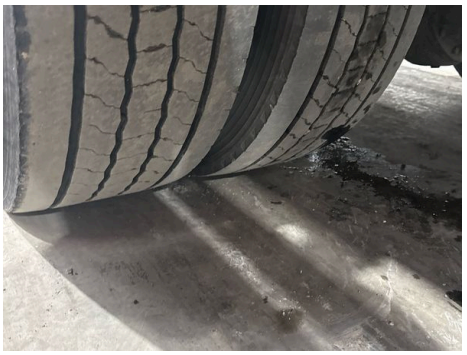



Condition Check

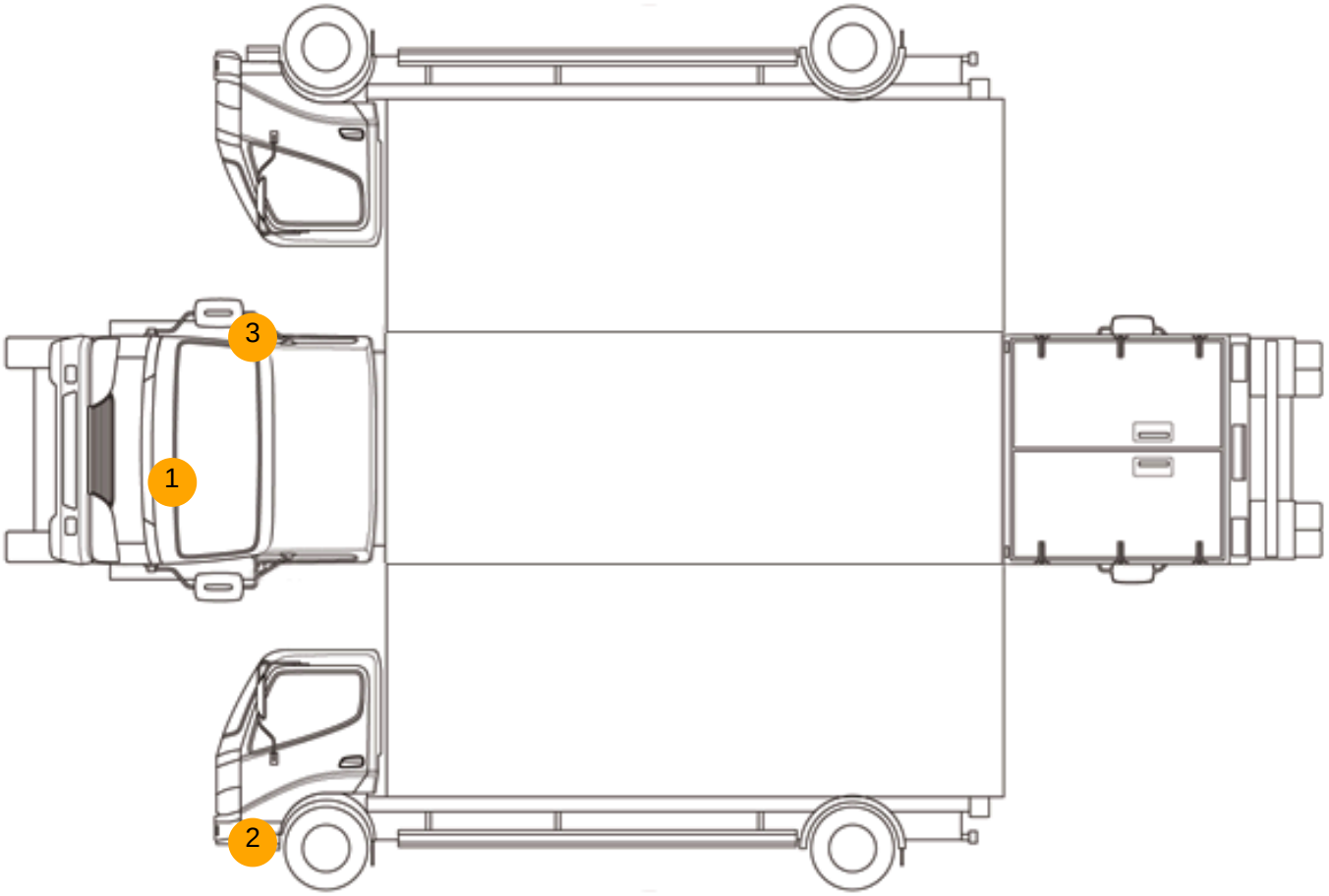

Damage Photos



1: Panel Front
Chipped
Multiple Chips



2: Bumper Front
Scratched
Over 100mm Thru Paint



3: Door Mirror Assy osf
Broken
Replace

Interior

Carpet Condition	OK	**Upholstery Condition**	OK
Seat Condition	OK	**Odour**	-

Engine Runs	OK	No Excessive Smoking	OK
EML light illuminated	OK	Oil warning light illuminated	OK
ABS light illuminated	OK	DPF light illuminated	OK
		Service indicator light illuminated	OK