COMMERCIAL VEHICLE AUCTIONS LTD
THE UK'S MOST ESTABLISHED COMMERCIAL VEHICLE AUCTIONEERS

Carr Hill Industrial Estate
Doncaster
DN4 8DE
01302 732600 | cva.noreply@cva-auctions.co.uk

VEHICLE INSPECTION REPORT

LJ69EYL

Johnston C202

Inspection

Serious Damage?	No

Vehicle

VAT	Plus VAT
V5	Present
Cap Code	999900

Details

Location	Doncaster	**Fuel Type**	DIESEL	**Body Style**	Sweeper
Reg. date	25/11/2019	**GVW**	4500kg	**Gearbox**	AUTOMATIC
Year	2019	**Colour**	WHITE		
Mileage	15,307 Miles Not Warranted	**VIN**	TEBC20BV8KKVJ8688		

ONLY RUNS ON BOOST PACK

Tyres

NSF	
NSR	
OSF	
OSR	
Spare	

Photos








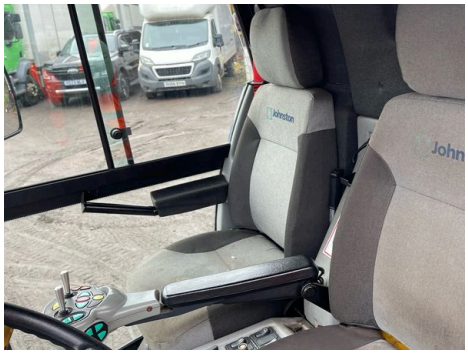















Commercial Vehicle Auctions Limited

Condition Check

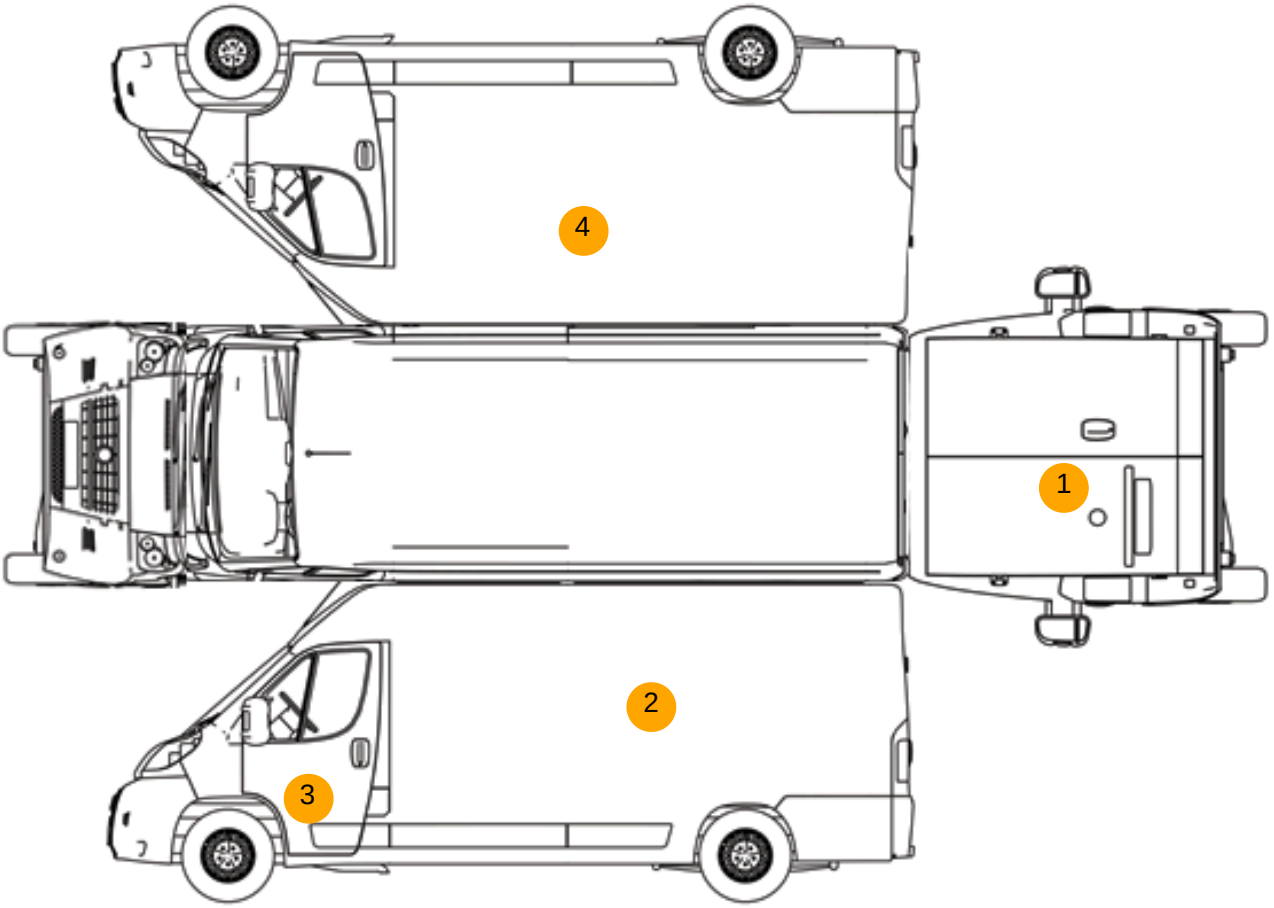

Damage Photos



1: Tailgate
Rusted
Over 5mm



2: Qtr Panel nsr
Dented
With Paint Damage



3: Door nsf
Scratched
Over 25mm Thru Paint

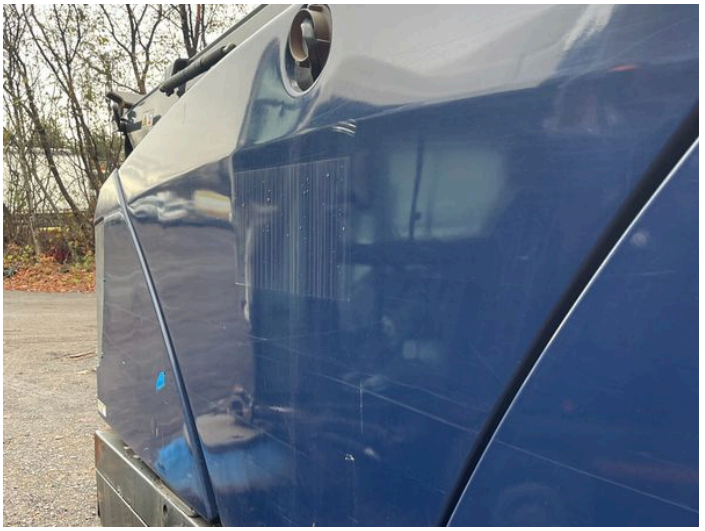

4: Qtr Panel osr
Scratched
Over 25mm Thru Paint

Interior

Carpet Condition	Average	**Upholstery Condition**	Average
Seat Condition	Average	**Odour**	-

Engine Runs	OK	Gearbox 1st and Reverse Test	OK
Brakes	OK	Clutch Slip Test from Static	OK
Turbo Boosting	OK	Gearbox Static Gear Selection (engine running)	OK
Parking Brake	OK	No Excessive Smoking	OK
EML light illuminated	OK	Oil warning light illuminated	OK
Airbag light illuminated	OK	DPF light illuminated	OK
ABS light illuminated	OK	Service indicator light illuminated	OK
Windows	OK	Radio	OK
		Steering	OK