COMMERCIAL VEHICLE AUCTIONS LTD
THE UK'S MOST ESTABLISHED COMMERCIAL VEHICLE AUCTIONEERS

Carr Hill Industrial Estate
Doncaster
DN4 8DE
01302 732600 | cva.noreply@cva-auctions.co.uk

VEHICLE INSPECTION REPORT

LJ69EYM

Johnston C202

Inspection

Serious Damage?	No

Vehicle

VAT	Plus VAT
V5	Present
Cap Code	999900

Details

Location	Doncaster	**Fuel Type**	DIESEL	**Body Style**	Sweeper
Reg. date	25/11/2019	**GVW**	4500kg	**Gearbox**	AUTOMATIC
Year	2019	**Colour**	BLUE		
Mileage	7,346 Miles Not Warranted	**VIN**	TEBC20BVXKKVJ8689		

WARNING LIGHTS ON DASH

Tyres

NSF	
NSR	
OSF	
OSR	
Spare	

Photos










LJ69
EYM

TEBC20BVXKKVJ8689
Johnston
Serial No: •TEBC20BVXKKVJ8689•
CERTIFIED
EUnite
Municipal Equipment
FOR A CLEAN ENVIRONMENT






Condition Check

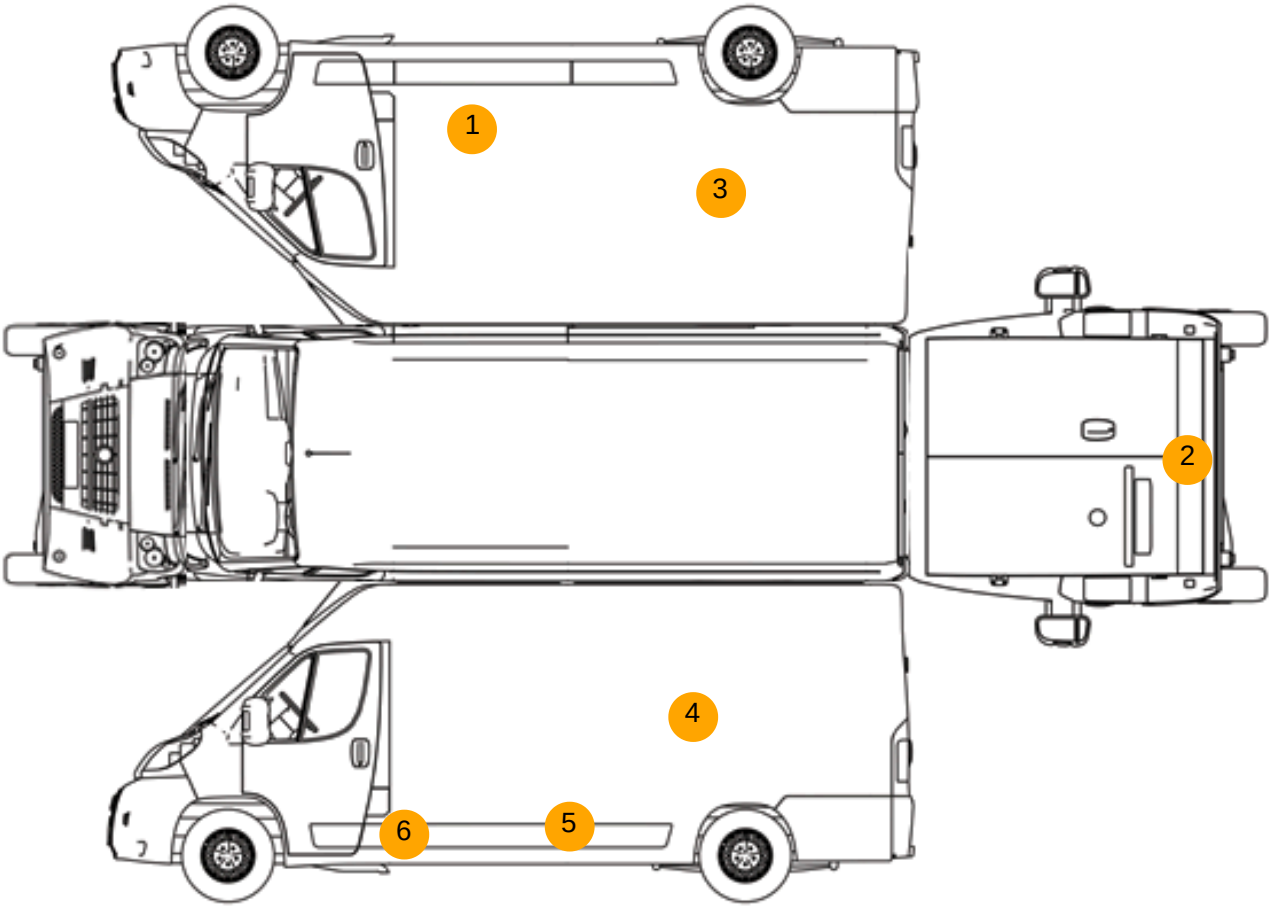

Damage Photos



1: Qtr Panel osr
Rusted
Over 5mm



2: Tailgate
Rusted
Over 5mm



3: Qtr Panel osr
Dented
Over 30mm



4: Qtr Panel nsr
Dented
Over 30mm



5: Qtr Panel nsr
Rusted
Over 5mm



6: Qtr Panel nsr
Rusted
Over 5mm

Interior

Carpet Condition	Average	**Upholstery Condition**	Average
Seat Condition	Average	**Odour**	No

Engine Runs	OK	Gearbox 1st and Reverse Test	OK
Brakes	OK	Clutch Slip Test from Static	OK
Turbo Boosting	OK	Gearbox Static Gear Selection (engine running)	OK
Parking Brake	OK	No Excessive Smoking	OK
EML light illuminated	OK	Oil warning light illuminated	OK
Airbag light illuminated	OK	DPF light illuminated	OK
ABS light illuminated	OK	Service indicator light illuminated	Fault