COMMERCIAL VEHICLE AUCTIONS LTD
THE UK'S MOST ESTABLISHED COMMERCIAL VEHICLE AUCTIONEERS

Carr Hill Industrial Estate
Doncaster
DN4 8DE
01302 732600 | cva.noreply@cva-auctions.co.uk

VEHICLE INSPECTION REPORT

DU25VWH

Ford Transit 350 2.0 ECOBLUE 130PS LEADER

Inspection

Serious Damage?	No

Vehicle

VAT	Plus VAT
V5	Present
Cap Id	63507
Cap Code	FOTR2035N4BDTM2 5 L

Details

Location	Bedford	**GVW**	3500kg	**Gearbox**	MANUAL
Reg. date	27/03/2025	**Colour**	WHITE	**Gears**	6
Year	2025	**VIN**	WF0AXXTTRASJ32795	**Tail Lift**	Column
Mileage	101,261 Miles Not Warranted	**Body Style**	Luton L4		
Fuel Type	DIESEL	**MOT Due**	26/03/2028		

AD BLUE, E/MIRRORS

Tyres

NSF	
NSR	
OSF	
OSR	
Spare	

Features

- Park assist camera
- Air conditioning
- Front electric windows

Photos




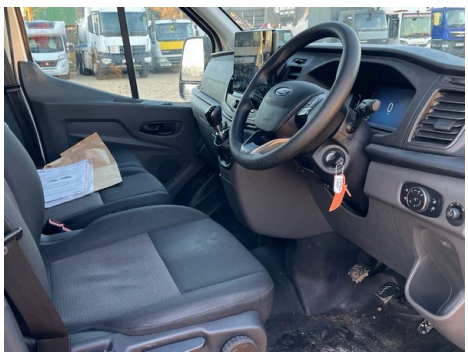









FORD
e1*2007/46*1096
WF0AXXTTRASJ32795
3500
5550
1850
2450
BKRA
0.50
Ford Motor Company Limited
Arterial Road, Laindon Essex.
SS15 6EE United Kingdom
W(mm)
L(mm)
a(mm)
B
3954
FED

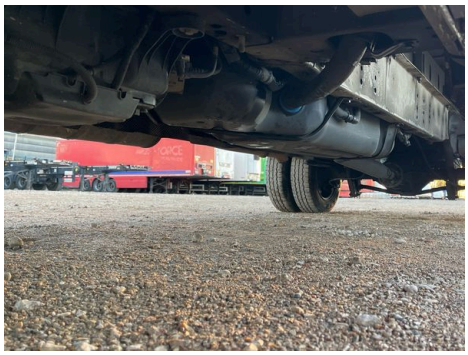















Condition Check

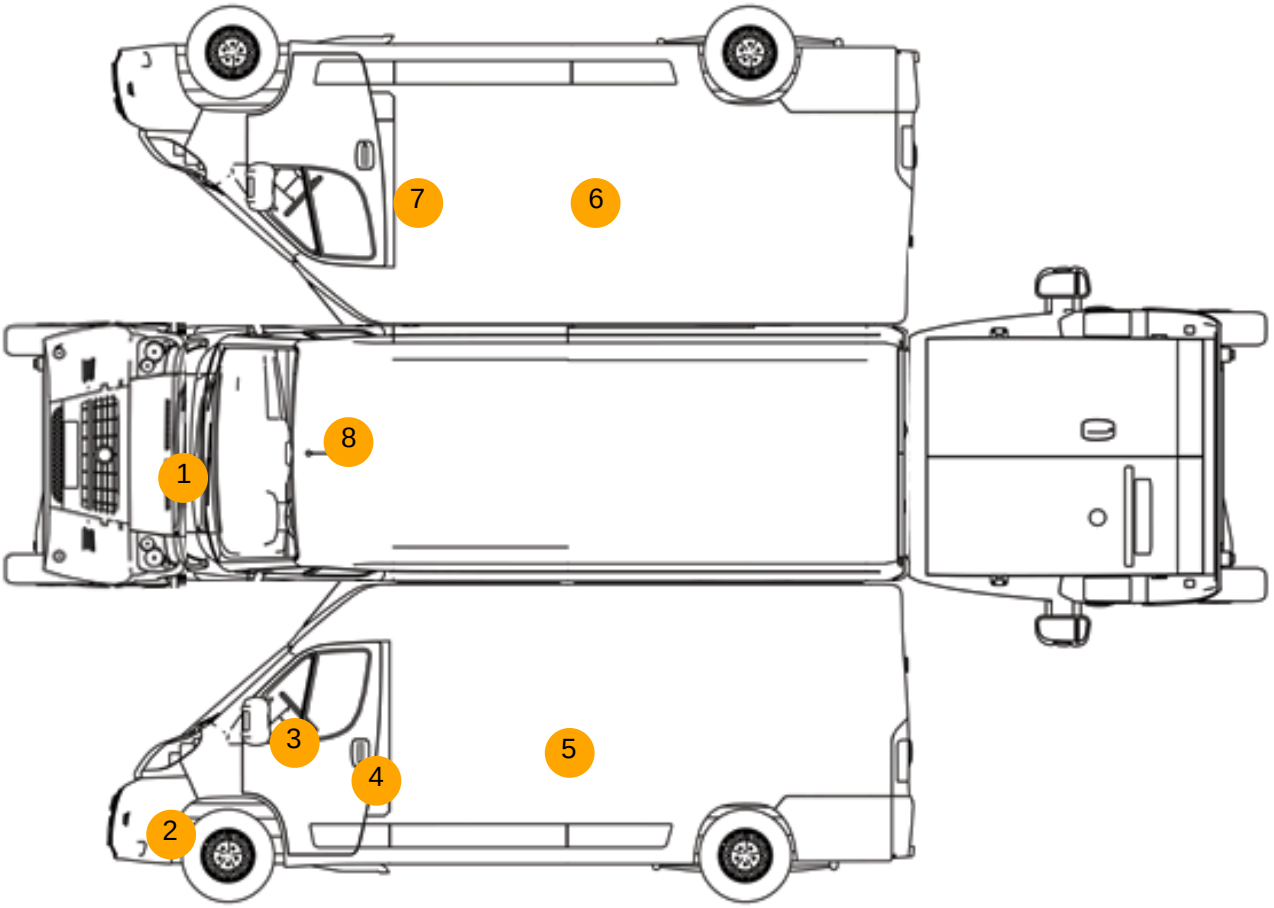

Damage Photos

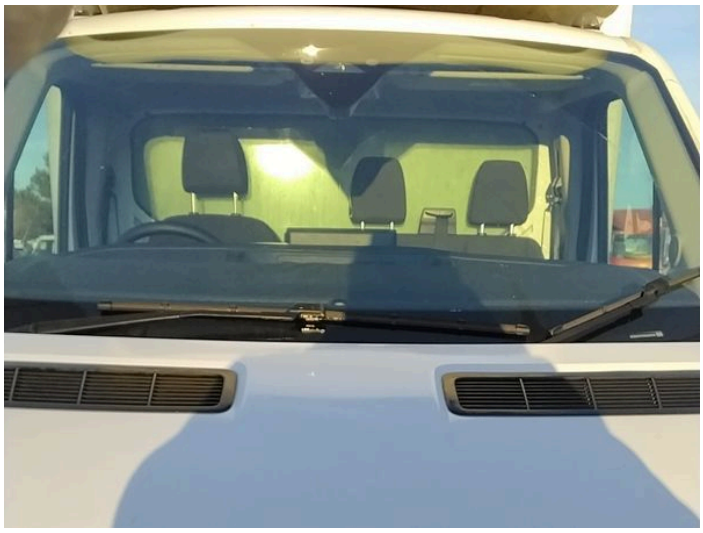

1: Bonnet
Chipped
Multiple Chips



2: Bumper Front Moulding
Scuffed (Unpainted)
UpTo 100mm



3: Door Mirror Assy nsf
Scuffed (Unpainted)
UpTo 100mm



4: Door nsf
Scratched
UpTo 25mm Not Thru Paint



5: Qtr Panel nsr
Scratched
Over 25mm Not Thru Paint



6: Qtr Panel osr
Scratched
Over 25mm Not Thru Paint



7: Door osf
Chipped
Edge Chip

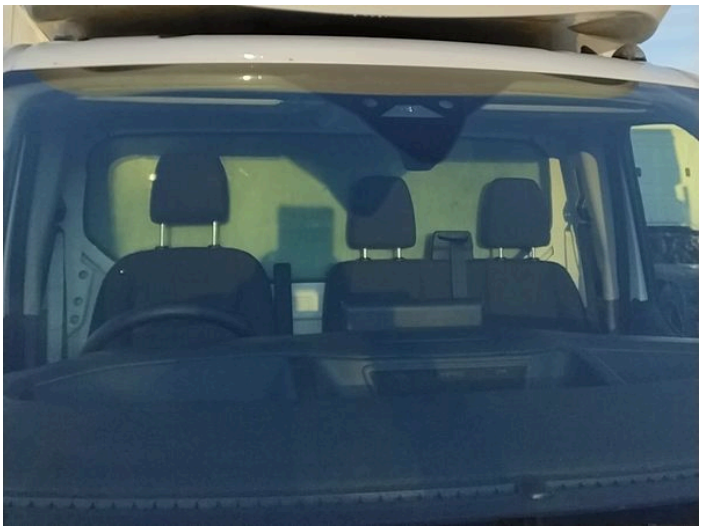

8: Roof
Rusted
Over 5mm

Interior

Carpet Condition	OK	**Upholstery Condition**	OK
Seat Condition	OK	**Odour**	No

Engine Runs	OK	Gearbox 1st and Reverse Test	OK
Brakes	OK	Clutch Slip Test from Static	OK
Parking Brake	OK	Gearbox Static Gear Selection (engine running)	OK
		No Excessive Smoking	OK

EML light illuminated	OK	Oil warning light illuminated	OK
Airbag light illuminated	OK	DPF light illuminated	OK
ABS light illuminated	OK	Service indicator light illuminated	OK