COMMERCIAL VEHICLE AUCTIONS LTD
THE UK'S MOST ESTABLISHED COMMERCIAL VEHICLE AUCTIONEERS

Carr Hill Industrial Estate
Doncaster
DN4 8DE
01302 732600 | cva.noreply@cva-auctions.co.uk

VEHICLE INSPECTION REPORT

BU69TSX

Daf LF 230

Inspection

Serious Damage?	No

Vehicle

VAT	Plus VAT
V5	Buyer To Apply
Cap Code	999900

Details

Location	Doncaster	**Colour**	WHITE	**Axle Combi**	4x2
Reg. date	05/12/2019	**VIN**	XLRAEL3700L491301	**Rear Suspension**	Air
Year	2019	**Body Style**	Fridge Box	**Rear Doors**	Roller
Mileage	TBC	**Service history**	None	**Tail Lift**	Tuckaway
Fuel Type	DIESEL	**Cab Type**	DAY CAB		
GVW	18000kg	**Gearbox**	MANUAL		

ONLY RUNS WITH BOOST PACK - VARIOUS ISSUES, NO CAT CONVERTOR, PARTS MISSING, WARNING LIGHTS THERMOKING T-1000R, STANDBY PLUG

Tyres

NSF	**NSI1**	**NSI2**	**NSI3**	**NSI4**
OSF	**OSI1**	**OSI2**	**OSI3**	**OSI4**
Spare	**NSO1**	**NSO2**	**NSO3**	**NSO4**
	OSO1	**OSO2**	**OSO3**	**OSO4**

Features

- Bluetooth connection
- Air conditioning
- Cruise control
- Front electric windows
- Park assist camera
- Central locking
- Radio/CD
- Cloth seat trim

Photos









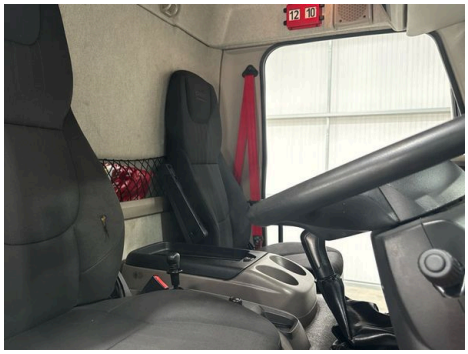

OFF
e, Be Proud, Be Domino's
OK

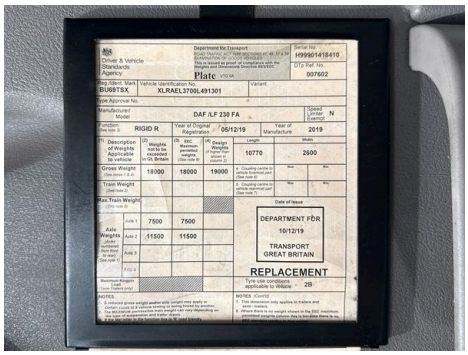
Driver & Vehicle Standards Agency
Plate
XLRAEL3700L491301
DAF /LF 230 FA
RIGID R
05/12/19
2019
DEPARTMENT FOR
10/12/19
TRANSPORT
GREAT BRITAIN
REPLACEMENT

DAF TRUCKS N.V.
XLRAEL3700L491301
TYPE
DAF

Solomon
Temperature Controlled Rigids


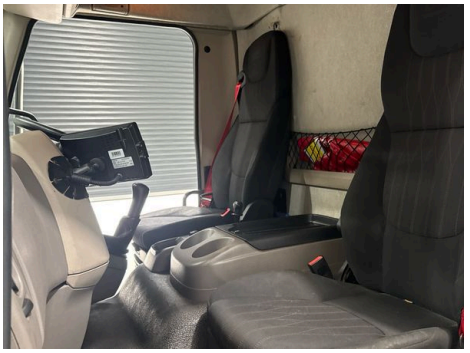


BU69 TSX


Solomon
Temperature Controlled Vehicles
Head Office
Solomon Commercials Ltd
Knowsley Road Industrial Estate
Haslingden, Rossendale
Lancashire BB4 4RX
tel (UK) 01706 211 211
web www.solocom.co.uk
email sales@solocom.co.uk
SOLOMON
BODY SERIAL NUMBER
301211/19
DATE OF MANUFACTURE
11 - 2019



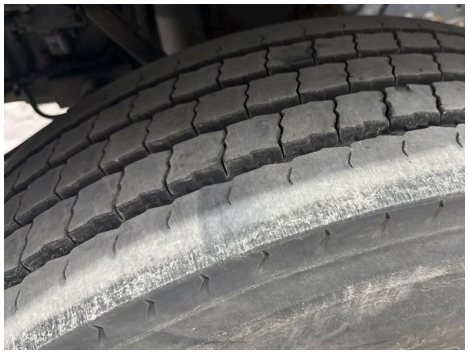





Condition Check

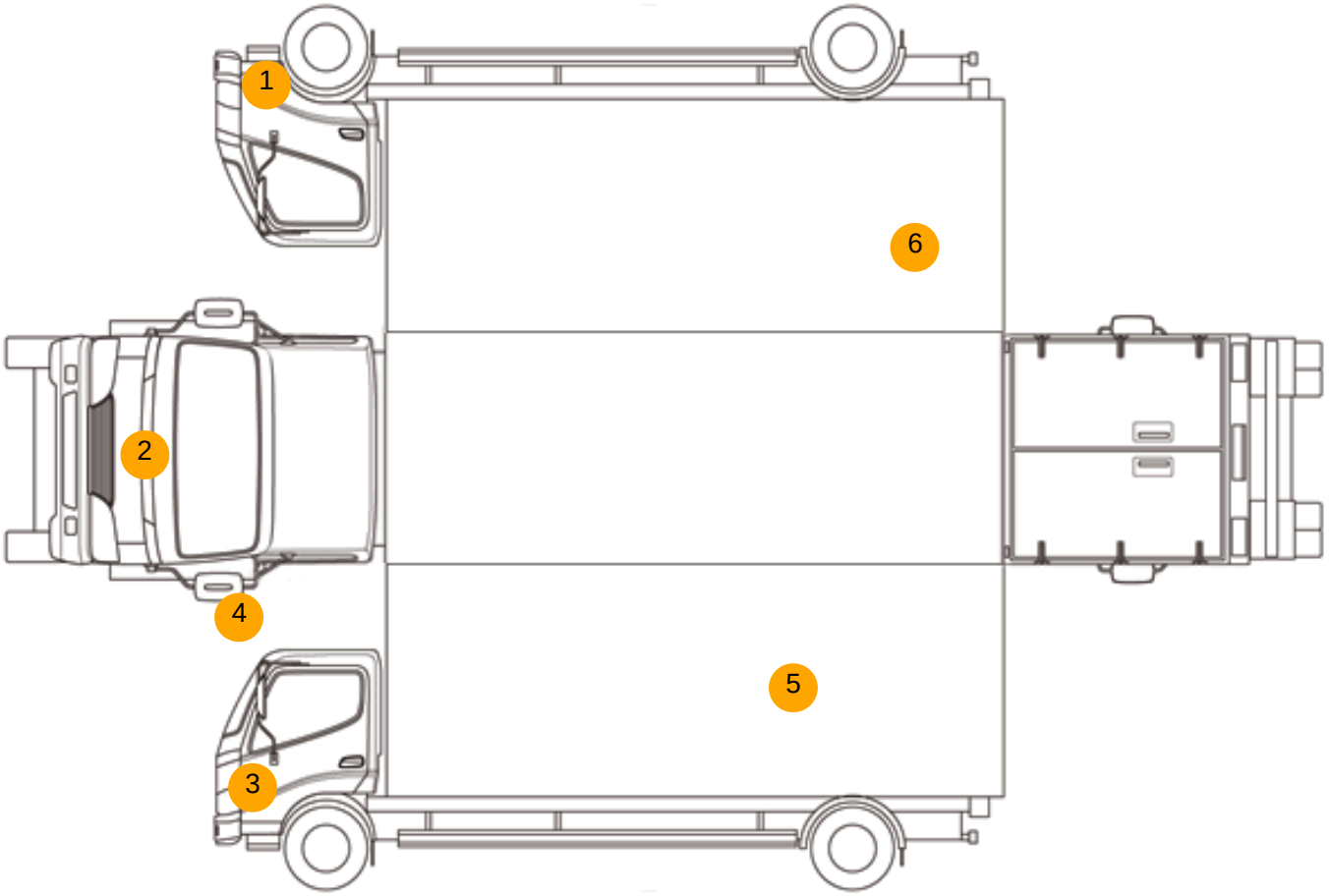

Damage Photos



1: Bumper Front
Scratched
Over 100mm Thru Paint



2: Bonnet
Chipped
Multiple Chips



3: Panel Front
Scratched
Over 25mm Thru Paint



4: Door Mirror Assy nsf
Scuffed (Unpainted)
UpTo 100mm



5: Qtr Panel nsr
Scratched
Over 25mm Thru Paint



6: Qtr Panel osr
Cracked
Replace



7: Seat Base Cover osf
Torn
Over 3mm

Interior

Carpet Condition	OK	**Upholstery Condition**	OK
Seat Condition	Poor	**Odour**	-
Engine Runs	Fault		

Commercial Vehicle Auctions Limited