COMMERCIAL VEHICLE AUCTIONS LTD
THE UK'S MOST ESTABLISHED COMMERCIAL VEHICLE AUCTIONEERS

Carr Hill Industrial Estate
Doncaster
DN4 8DE
01302 732600 | cva.noreply@cva-auctions.co.uk

VEHICLE INSPECTION REPORT

PE65UZV

DAF LF 220

Inspection

Serious Damage?	No

Vehicle

VAT	Plus VAT
V5	Present
Cap Code	999900

Details

Location	Doncaster
Reg. date	16/10/2015
Year	2015
Mileage	700,651 Km Warranted
Fuel Type	DIESEL
GVW	18000kg
Colour	RED

VIN	XLRAEL3700L448387
Body Style	Box Van
Service history	Yes
Service documents	Printout
Last service date	12/01/2026
Last service miles	651,708
MOT Due	30/11/2027

Cab Type	DAY CAB
Gearbox	AUTOMATIC
Axle Combi	4x2
Rear Suspension	Steel
Tail Lift	Cantilever

WARNING LIGHTS ON DASH

Tyres

NSF	**NSI1**	**NSI2**	**NSI3**	**NSI4**
OSF	**OSI1**	**OSI2**	**OSI3**	**OSI4**
Spare	**NSO1**	**NSO2**	**NSO3**	**NSO4**
	OSO1	**OSO2**	**OSO3**	**OSO4**

Features

- Digital radio
- Air conditioning

Photos








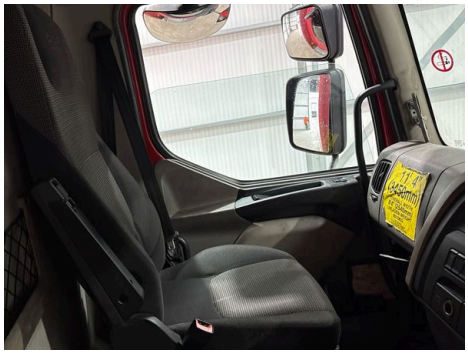

12 10 0km/h
700651.4km
HECK T/LIFT

R N D

REPLACEMENT

DAF TRUCKS N.V.
DAF

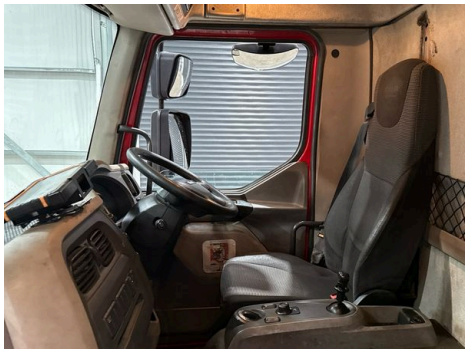






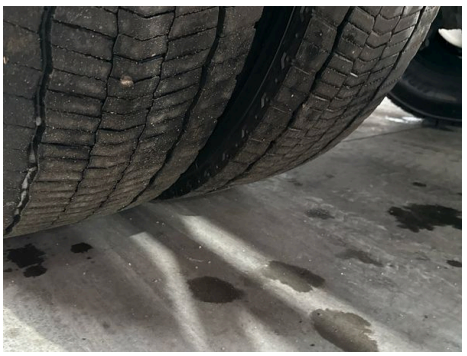

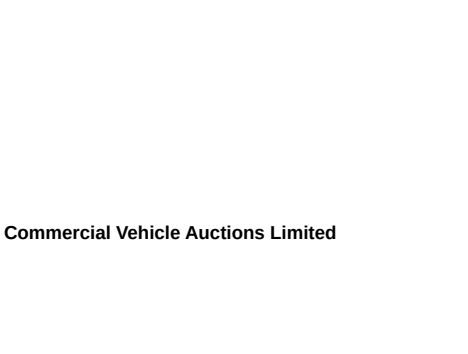



Condition Check

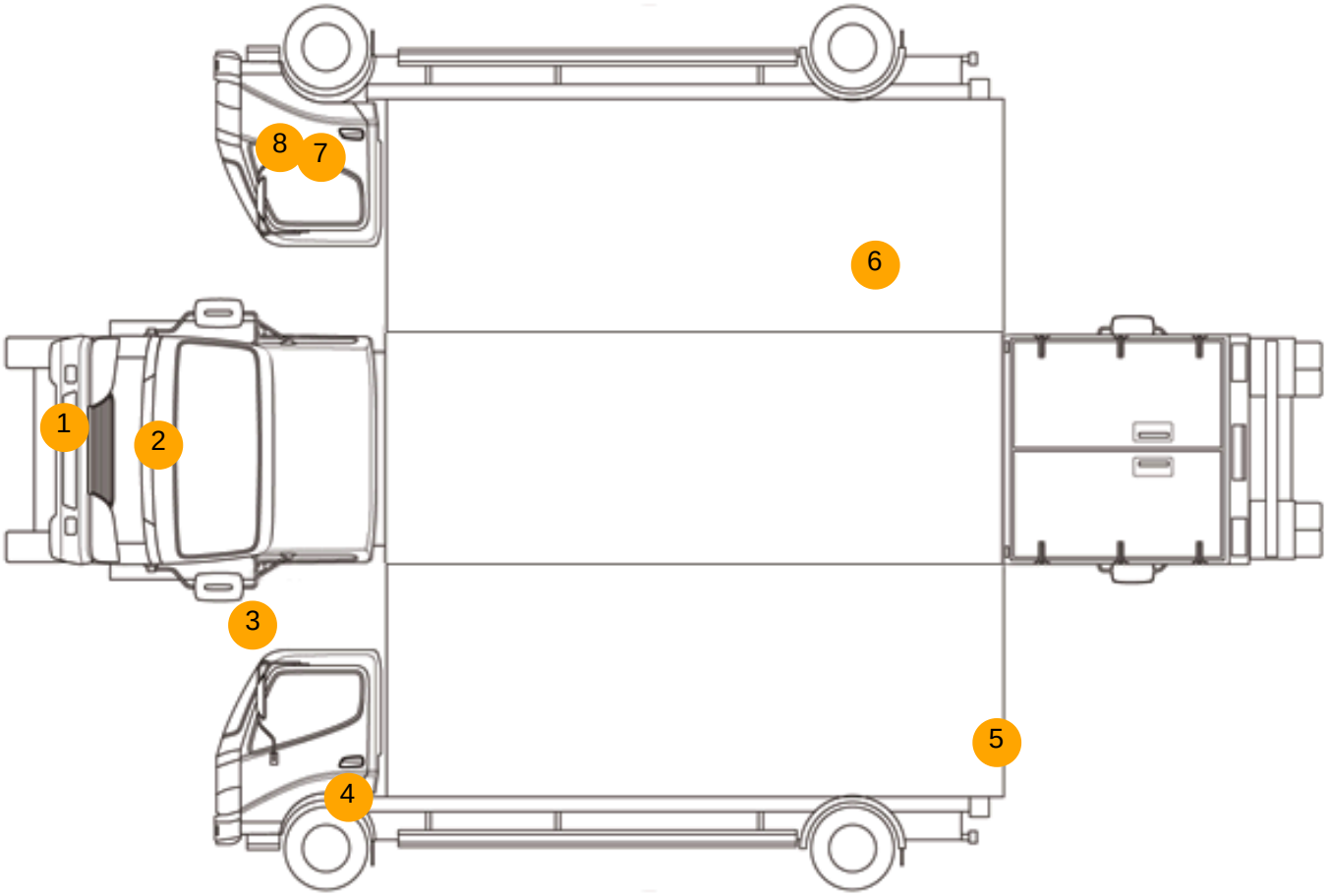

Damage Photos



1: Bumper Front
Dented
With Paint Damage



2: Panel Front
Chipped
Multiple Chips



3: Door Mirror Assy nsf
Scuffed (Unpainted)
Over 100mm



4: Door nsf
Scratched
Over 25mm Thru Paint



5: Qtr Panel nsr
Dented
With Paint Damage



6: Qtr Panel osr
Scratched
Over 25mm Not Thru Paint



7: Door osf
Scratched
Over 25mm Thru Paint

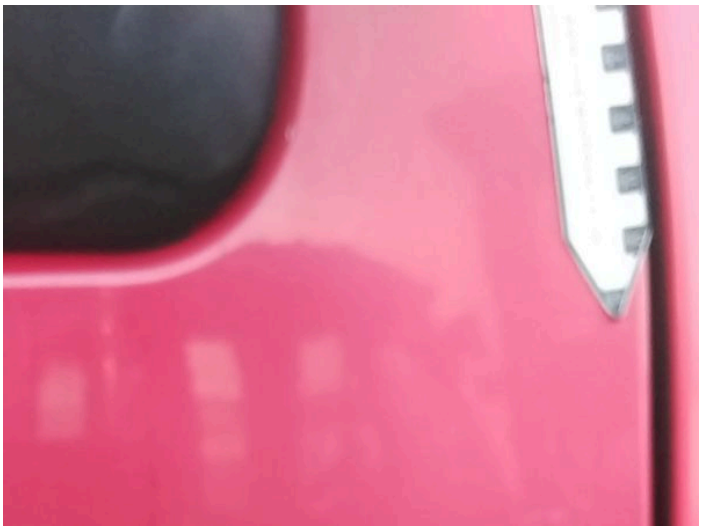

8: Door osf
Dented
With Paint Damage



9: Door Pad osf
Soiled
Heavy



10: Door Pad nsf
Soiled
Heavy



11: Dash Warning Lights
Displayed
No Action

Interior

Carpet Condition	OK	**Upholstery Condition**	Poor
Seat Condition	OK	**Odour**	-

Engine Runs	OK	No Excessive Smoking	OK
EML light illuminated	Fault	Oil warning light illuminated	OK
ABS light illuminated	OK	DPF light illuminated	OK
		Service indicator light illuminated	OK