COMMERCIAL VEHICLE AUCTIONS LTD
THE UK'S MOST ESTABLISHED COMMERCIAL VEHICLE AUCTIONEERS

Carr Hill Industrial Estate
Doncaster
DN4 8DE
01302 732600 | cva.noreply@cva-auctions.co.uk

VEHICLE INSPECTION REPORT

FP69YWZ

Vauxhall Vivaro 2900 1.5D 100PS EDITION

Inspection

Serious Damage?	No

Vehicle

VAT	Plus VAT
V5	To Follow
Cap Id	44124
Cap Code	VAVI15191DVDTM2 3 L

Details

Location	Doncaster	**GVW**	2830kg	**CAP Clean**	£6,725.00
Reg. date	31/12/2019	**Colour**	WHITE	**CAP Average**	£5,800.00
Year	2019	**VIN**	VXEVBYHRKL7008602	**CAP Below**	£4,500.00
Mileage	58,418 Miles Warranted	**Body Style**	Panel Van L1	**Gearbox**	MANUAL
		MOT Due	08/06/2027	**Gears**	6
Fuel Type	DIESEL				

WARNING LIGHTS ON DASH AD-BLUE, TWIN SIDE LOAD DOOR, E/ MIRRORS, RACKING, DEADLOCKS

Tyres

NSF	
NSR	
OSF	
OSR	
Spare	

Features

- Bluetooth connection
- Auxiliary input socket
- Drivers airbag
- Cruise control
- Digital radio
- Passenger airbag
- Park assist camera
- Air conditioning
- Central locking
- Rear parking sensor
- Front electric windows
- Cloth seat trim

Photos











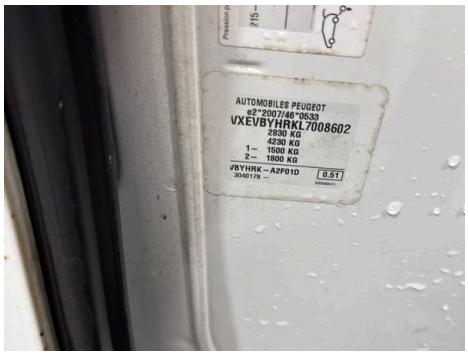
AUTOMOBILES PEUGEOT
VXEVBYHRKL7008602
2830 KG
4230 KG
1500 KG
1800 KG
VBYHRK – A2F01D
0.5T








AIRBAG








Condition Check

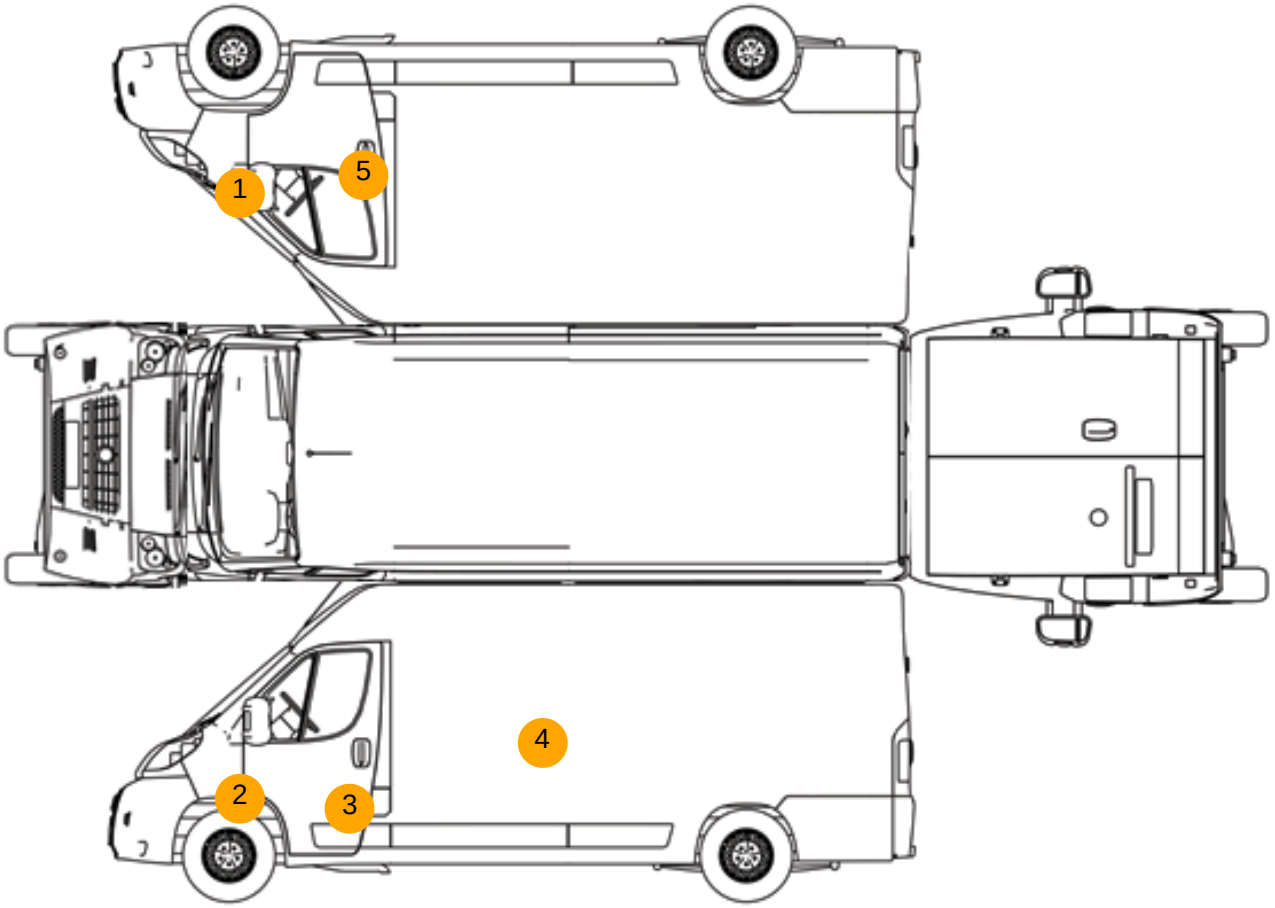

Damage Photos



1: Wing osf
Scratched
Over 25mm Not Thru Paint



2: Wing nsf
Scratched
Over 25mm Thru Paint



3: Door nsf
Dented
With Paint Damage



4: Qtr Panel nsr
Dented
With Paint Damage



5: Door osf
Scratched
Over 25mm Thru Paint



6: Seat Base Cover osf
Holed
Over 3mm



7: Door Pad osf
Soiled
Heavy



8: Dash Warning Lights
Displayed
No Action



9: Seat Base Cover nsf
Scuffed
Over 25mm

Interior

Carpet Condition	OK	**Upholstery Condition**	Poor
Seat Condition	Poor	**Odour**	No

Engine Runs	OK	No Excessive Smoking	OK
EML light illuminated	OK	Oil warning light illuminated	OK
Airbag light illuminated	OK	DPF light illuminated	OK
ABS light illuminated	OK	Service indicator light illuminated	Fault