COMMERCIAL VEHICLE AUCTIONS LTD
THE UK'S MOST ESTABLISHED COMMERCIAL VEHICLE AUCTIONEERS

Carr Hill Industrial Estate
Doncaster
DN4 8DE
01302 732600 | cva.noreply@cva-auctions.co.uk

VEHICLE INSPECTION REPORT

YP22WVW

Ford Transit 350 2.0 ECOBLUE 130PS LEADER

Inspection

Serious Damage?	No

Vehicle

VAT	Plus VAT
V5	Buyer To Apply
Cap Id	44615
Cap Code	FOTR20L3L3HDTM2 5 L

Details

Location	Bedford	**GVW**	3500kg	**CAP Clean**	£7,650.00
Reg. date	28/07/2022	**Colour**	WHITE	**CAP Average**	£6,925.00
Year	2022	**VIN**	WF0EXXTTRENL15411	**CAP Below**	£5,825.00
Mileage	97,017 Miles Not Warranted	**Body Style**	Panel Van L4	**Gearbox**	MANUAL
Fuel Type	DIESEL	**MOT Due**	Expired	**Gears**	6

WARNING LIGHTS ON DASH AD BLUE, SIDE LOADING DOOR

Tyres

NSF	
NSR	
OSF	
OSR	
Spare	

Features

- Park assist camera
- Front electric windows

Photos









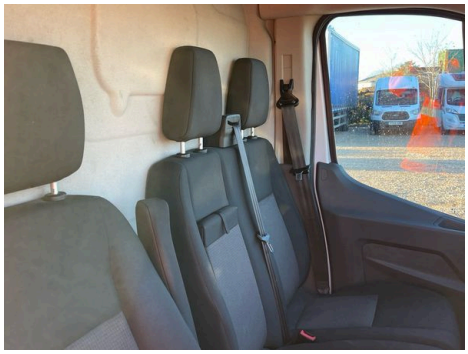


FORD
e1*2007/46*1100
* WF0EXXTTRENL15411 *
TRANSIT
BASE
2.0 I HPCR Panther Diesel
130 PS
Stage 6.2
350EF
BKRA
0.50
3500
5550
1750
2250
W(mm)
L(mm)
a(mm)
B
3750
FCD
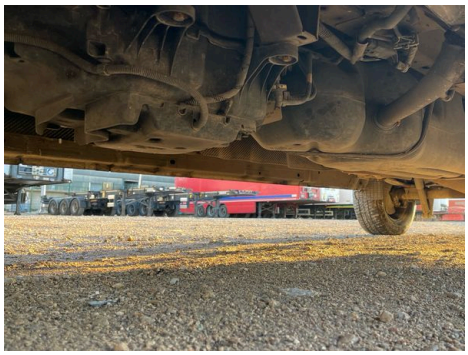


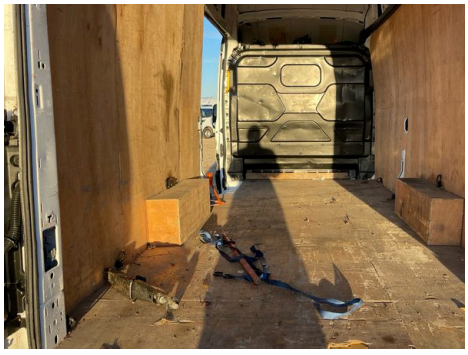





Condition Check

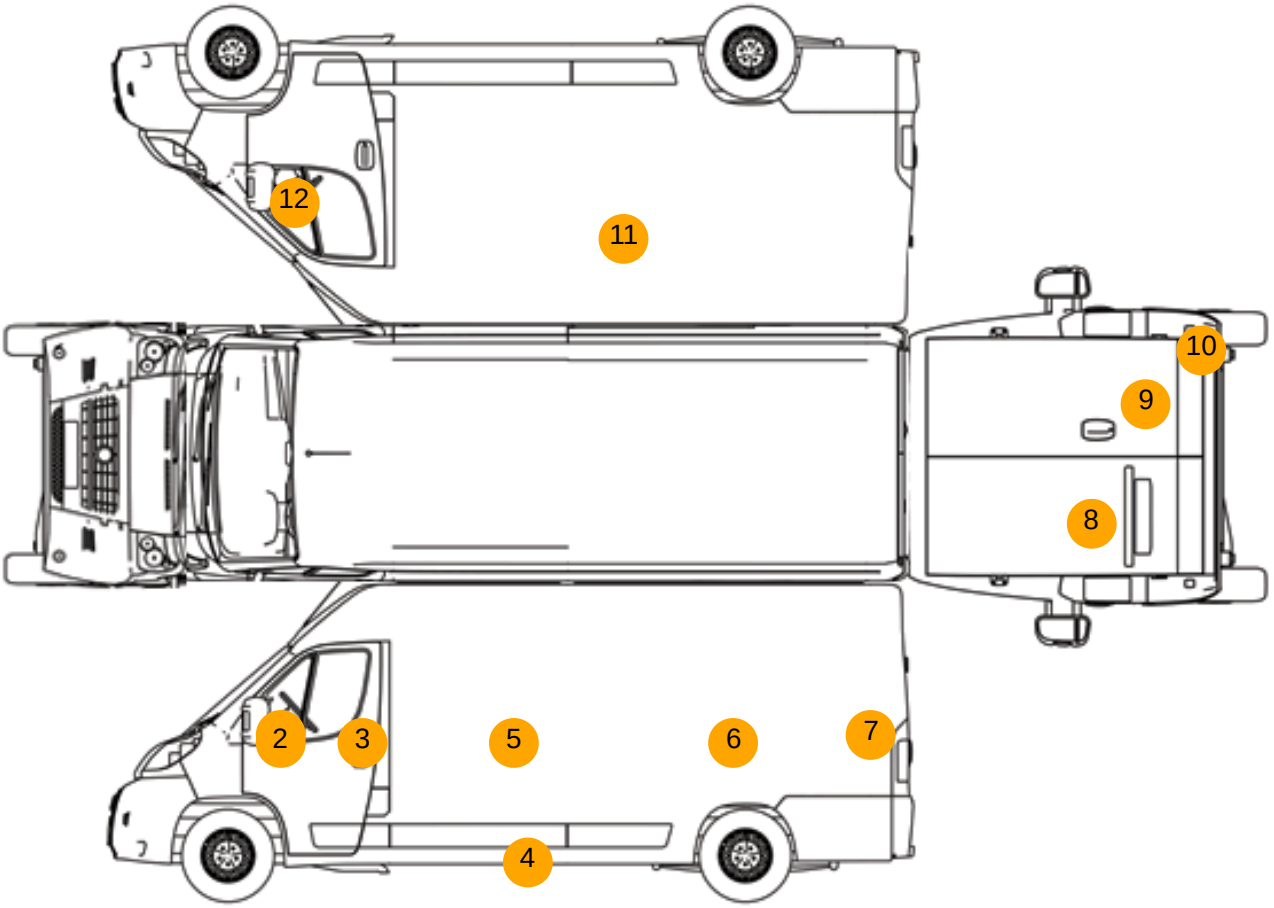

Damage Photos



1: Door Mirror Assy nsf
Scuffed (Unpainted)
UpTo 100mm



2: Flasher Side Repeater ns
Broken
Replace



3: Door nsf
Scratched
Over 25mm Not Thru Paint



4: Qtr Panel Moulding ns
Broken
Replace



5: Door nsr
Scratched
Over 25mm Not Thru Paint



6: Qtr Panel nsr
Scratched
Over 25mm Thru Paint



7: Qtr Panel nsr
Dented
With Paint Damage

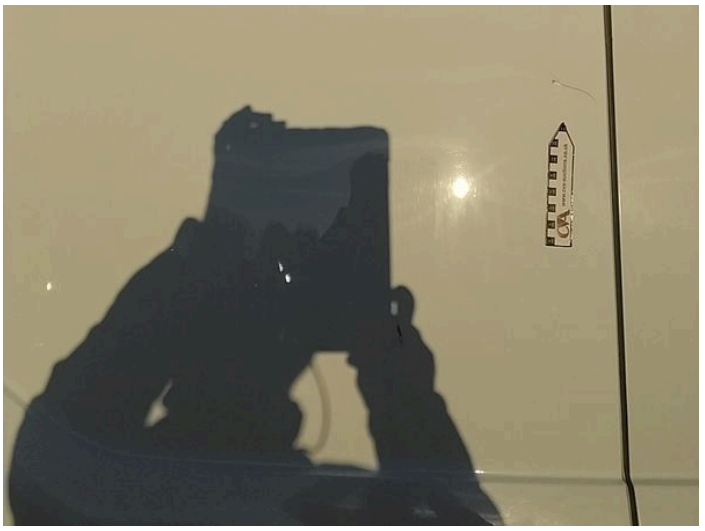

8: Door nsr
Dented
With Paint Damage



9: Door osr
Scratched
Over 25mm Thru Paint



10: Bumper Rear
Dented
Over 30mm



11: Qtr Panel osr
Dented
Over 30mm



12: Door Mirror Assy osf
Scuffed (Unpainted)
UpTo 100mm

Interior

Carpet Condition	Average	**Upholstery Condition**	Average
Seat Condition	Average	**Odour**	No

Engine Runs	OK	Gearbox 1st and Reverse Test	OK
Brakes	OK	Clutch Slip Test from Static	OK
Parking Brake	OK	Gearbox Static Gear Selection (engine running)	OK
		No Excessive Smoking	OK
EML light illuminated	OK	Oil warning light illuminated	OK
Airbag light illuminated	OK	DPF light illuminated	Fault
ABS light illuminated	Fault	Service indicator light illuminated	Fault