COMMERCIAL VEHICLE AUCTIONS LTD
THE UK'S MOST ESTABLISHED COMMERCIAL VEHICLE AUCTIONEERS

Carr Hill Industrial Estate
Doncaster
DN4 8DE
01302 732600 | cva.noreply@cva-auctions.co.uk

VEHICLE INSPECTION REPORT

MJ67YME

Daf CF 230

Inspection

Serious Damage?	No

Vehicle

VAT	Plus VAT
V5	Present
Cap Code	999900

Details

Location	Livingston	**GVW**	18000kg	**Cab Type**	SLEEPER CAB
Reg. date	16/01/2018	**Colour**	RED	**Gearbox**	MANUAL
Year	2018	**VIN**	XLRAEM3700G164714	**Axle Combi**	4x2
Mileage	676,646 Km Warranted	**Body Style**	Flatbed	**Rear Suspension**	Air
Fuel Type	DIESEL	**MOT Due**	31/05/2027		

REAR VIEW CAMERA, SERVICE SCHEDULE LIST AVAILABLE.

Tyres

NSF	**NSI1**	**NSI2**	**NSI3**	**NSI4**
OSF	**OSI1**	**OSI2**	**OSI3**	**OSI4**
Spare	**NSO1**	**NSO2**	**NSO3**	**NSO4**
	OSO1	**OSO2**	**OSO3**	**OSO4**

Features

- Radio/CD

Photos









DAF


OK


WJ67 YME

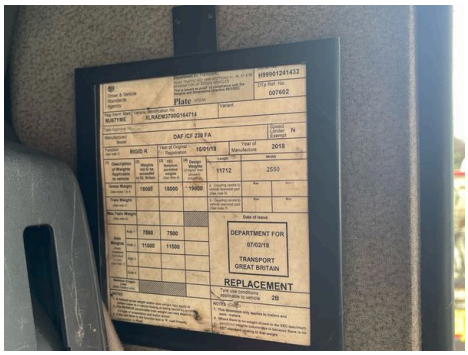
Plate
DEPARTMENT FOR
TRANSPORT
GREAT BRITAIN
REPLACEMENT

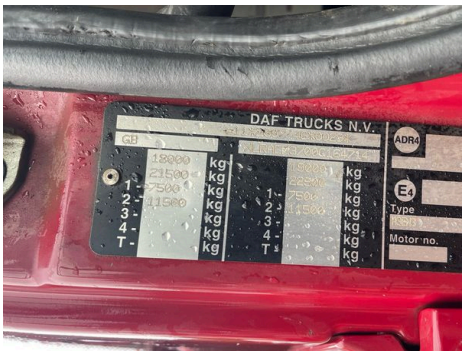
DAF TRUCKS N.V.
ADR
E4
Type
Motor no.











Condition Check

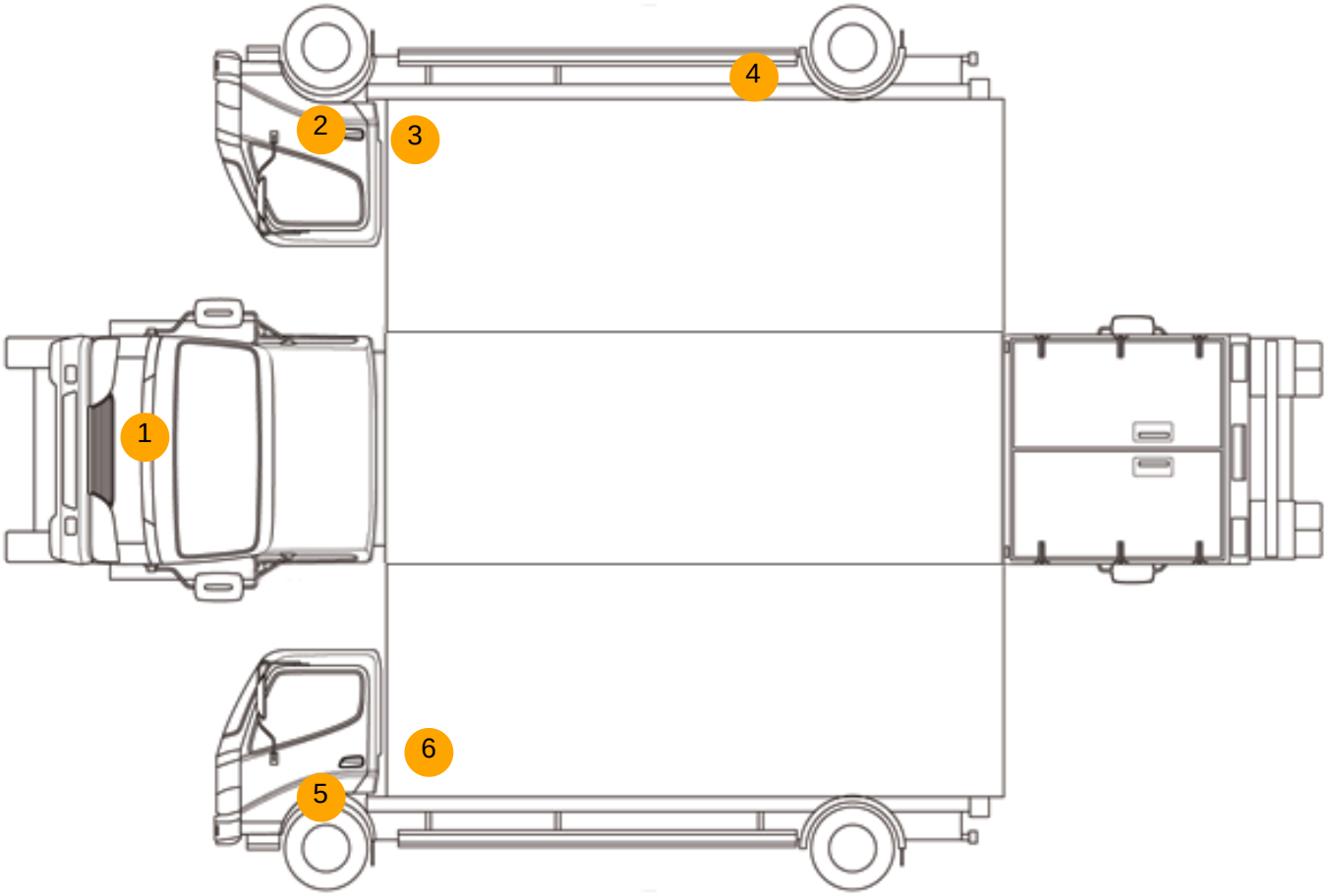

Damage Photos



1: Panel Front
Chipped
Multiple Chips

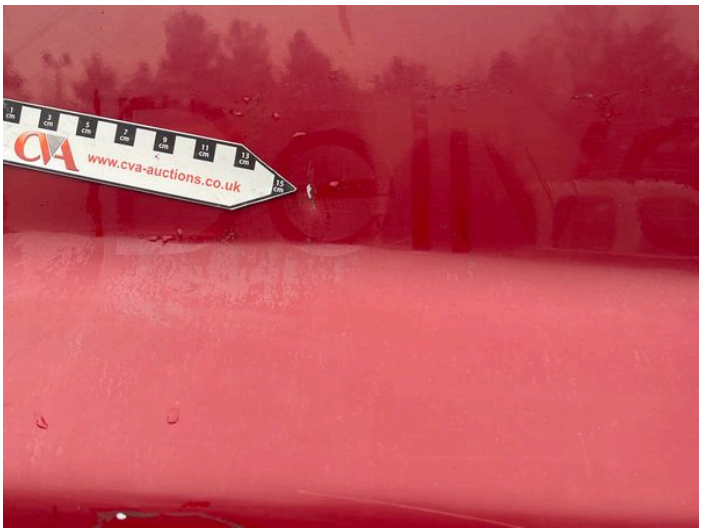

2: Door osf
Dented
With Paint Damage



3: Qtr Panel osr
Scratched
Over 25mm Not Thru Paint



4: Qtr Panel osr
Dented
Over 30mm



5: Door nsf
Scratched
Over 25mm Thru Paint



6: Qtr Panel nsr
Rusted
Over 5mm

Interior

Carpet Condition	Average	**Upholstery Condition**	Average
Seat Condition	Average	**Odour**	-

Engine Runs	OK	Gearbox 1st and Reverse Test	OK
Brakes	OK	Clutch Slip Test from Static	OK
Turbo Boosting	OK	Gearbox Static Gear Selection (engine running)	OK
Parking Brake	OK	No Excessive Smoking	OK
EML light illuminated	OK	Oil warning light illuminated	OK
Airbag light illuminated	OK	DPF light illuminated	OK
ABS light illuminated	OK	Service indicator light illuminated	OK