COMMERCIAL VEHICLE AUCTIONS LTD
THE UK'S MOST ESTABLISHED COMMERCIAL VEHICLE AUCTIONEERS

Carr Hill Industrial Estate
Doncaster
DN4 8DE
01302 732600 | cva.noreply@cva-auctions.co.uk

VEHICLE INSPECTION REPORT

FL25YBJ

Ford Transit Custom 320 100WW 65KWH LIMITED

Inspection

Serious Damage?	No

Vehicle

VAT	Plus VAT
V5	Buyer To Apply
Cap Id	57858
Cap Code	FOTU002L62ZE A2 2 L

Details

Location	Doncaster	**GVW**	3225kg	**CAP Average**	£20,150.00
Reg. date	18/03/2025	**Colour**	BLUE	**CAP Below**	£18,150.00
Year	2025	**VIN**	WF0SXXTA9BRY73968	**Gearbox**	AUTOMATIC
Mileage	12,824 Miles Not Warranted	**Body Style**	Crew Van L2	**Gears**	1
Fuel Type	Electric	**CAP Clean**	£20,950.00		

TWIN SIDE LOAD DOOR, E/ MIRRORS

Tyres

NSF	
NSR	
OSF	
OSR	
Spare	

Features

- Front parking sensor
- Rear parking sensor
- Heated front seat
- Air conditioning
- Navigation system
- Front electric windows
- Park assist camera
- Central locking

Photos





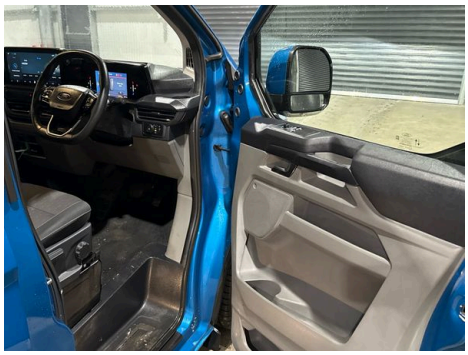



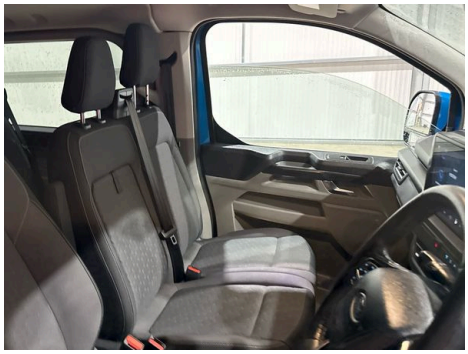

R
N
P
D
10 %
12824.3 mls
6°


FORD
3225
5350
1600
2000
W(mm)
L(mm)
3500
NRN



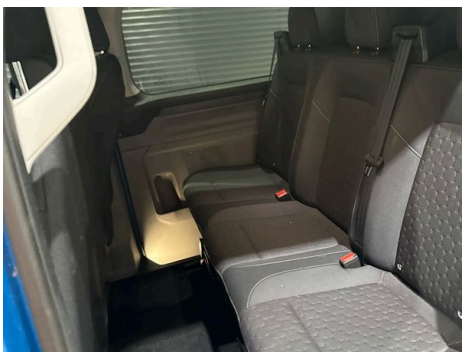

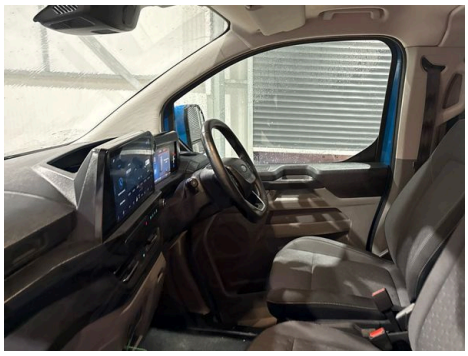

AIRBAG


DURAVIS
R660

DURAVIS
R660




Condition Check

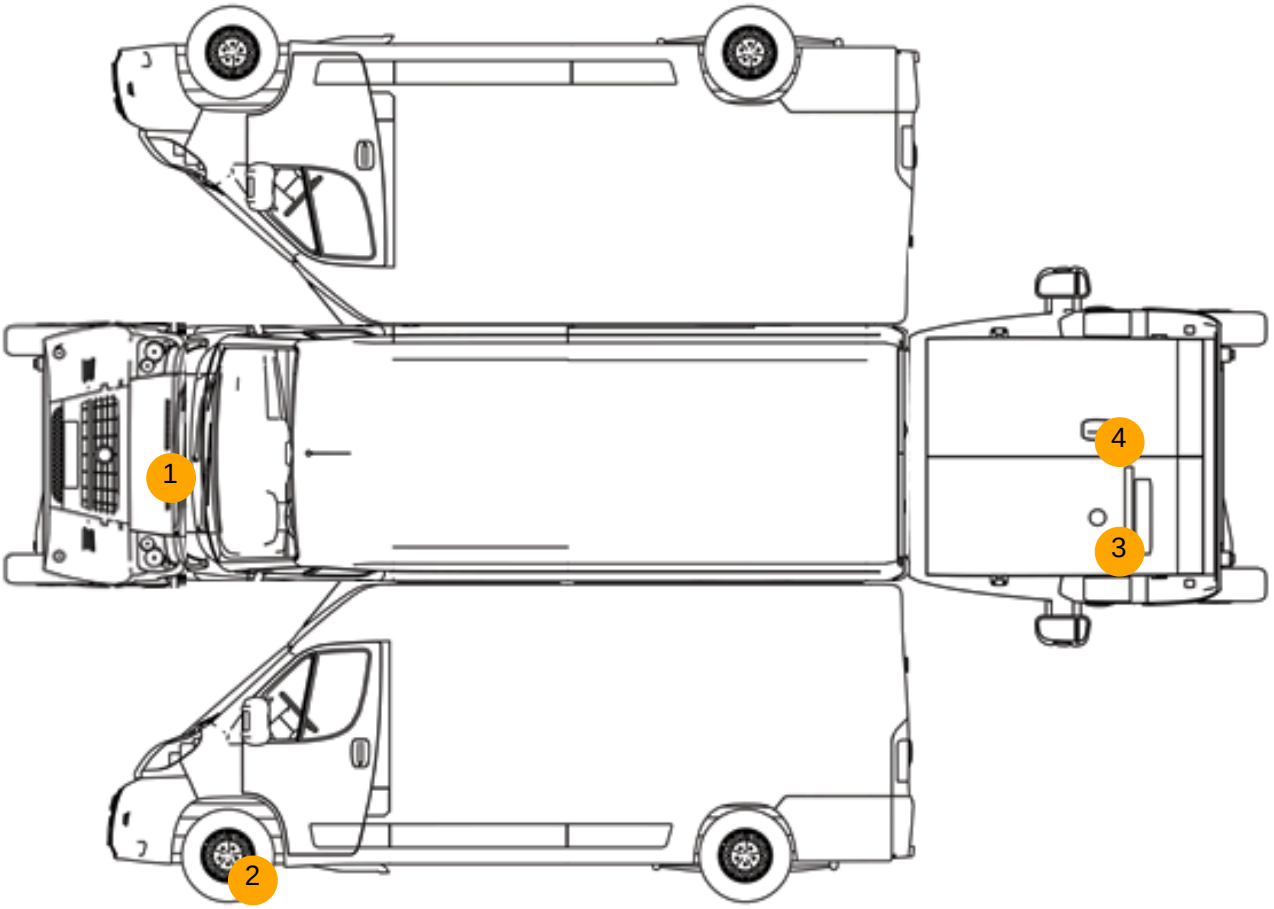

Damage Photos



1: Bonnet
Dented
Over 30% Of Panel



2: Wheel nsf
Scratched
Over 50mm

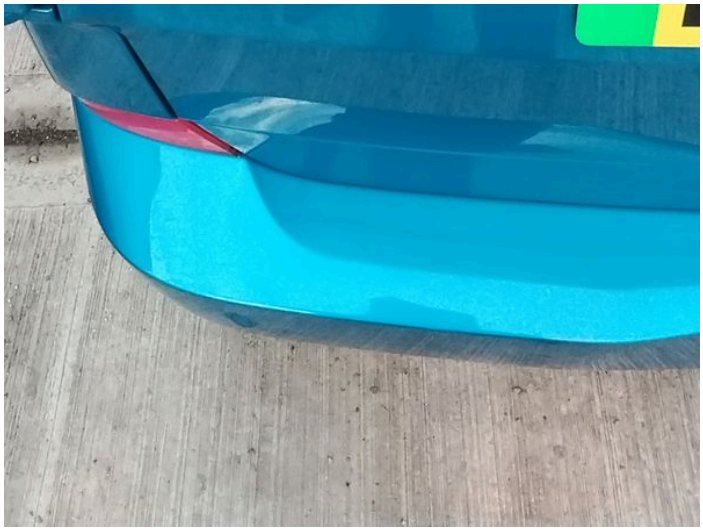

3: Door nsr
Chipped
1 To 5



4: Door osr
Scratched
Over 25mm Thru Paint

Interior

Carpet Condition	OK	**Upholstery Condition**	OK
Seat Condition	OK	**Odour**	No

Airbag light illuminated	OK	Service indicator light illuminated	OK
ABS light illuminated	OK		