COMMERCIAL VEHICLE AUCTIONS LTD
THE UK'S MOST ESTABLISHED COMMERCIAL VEHICLE AUCTIONEERS

Carr Hill Industrial Estate
Doncaster
DN4 8DE
01302 732600 | cva.noreply@cva-auctions.co.uk

VEHICLE INSPECTION REPORT

ST70UEE

Ford Ranger Wildtrak 2.0 EcoBlue 213PS

Inspection

Serious Damage?	No

Vehicle

VAT	Plus VAT
V5	Present
Cap Id	44067
Cap Code	FORA20WILD7DTA4 6 L

Details

Location	Avonmouth	**Colour**	GREY	**CAP Below**	£8,850.00
Reg. date	11/12/2020	**VIN**	6FPPXXMJ2PLL33095	**Gearbox**	AUTOMATIC
Year	2020	**Body Style**	Pickup Double Cab	**Gears**	1
Mileage	64,300 Miles Not Warranted	**MOT Due**	01/12/2026	**Axle Combi**	4x4
Fuel Type	DIESEL	**CAP Clean**	£12,600.00		
GVW	3270kg	**CAP Average**	£11,050.00		

AD BLUE, TOW BAR, ALLOY WHEELS, E/MIRRORS, HEATED WINDSCREEN

Tyres

NSF	
NSR	
OSF	
OSR	
Spare	

Features

- Bluetooth connection
- Navigation system
- Radio/CD
- Rear electric windows
- Leather seat trim
- Cruise control
- Park assist camera
- USB/iPod interface
- Drivers airbag
- Front parking sensor
- Rear parking sensor
- Air conditioning
- Passenger airbag
- Heated front seat
- Digital radio
- Front electric windows
- Central locking

Condition Check

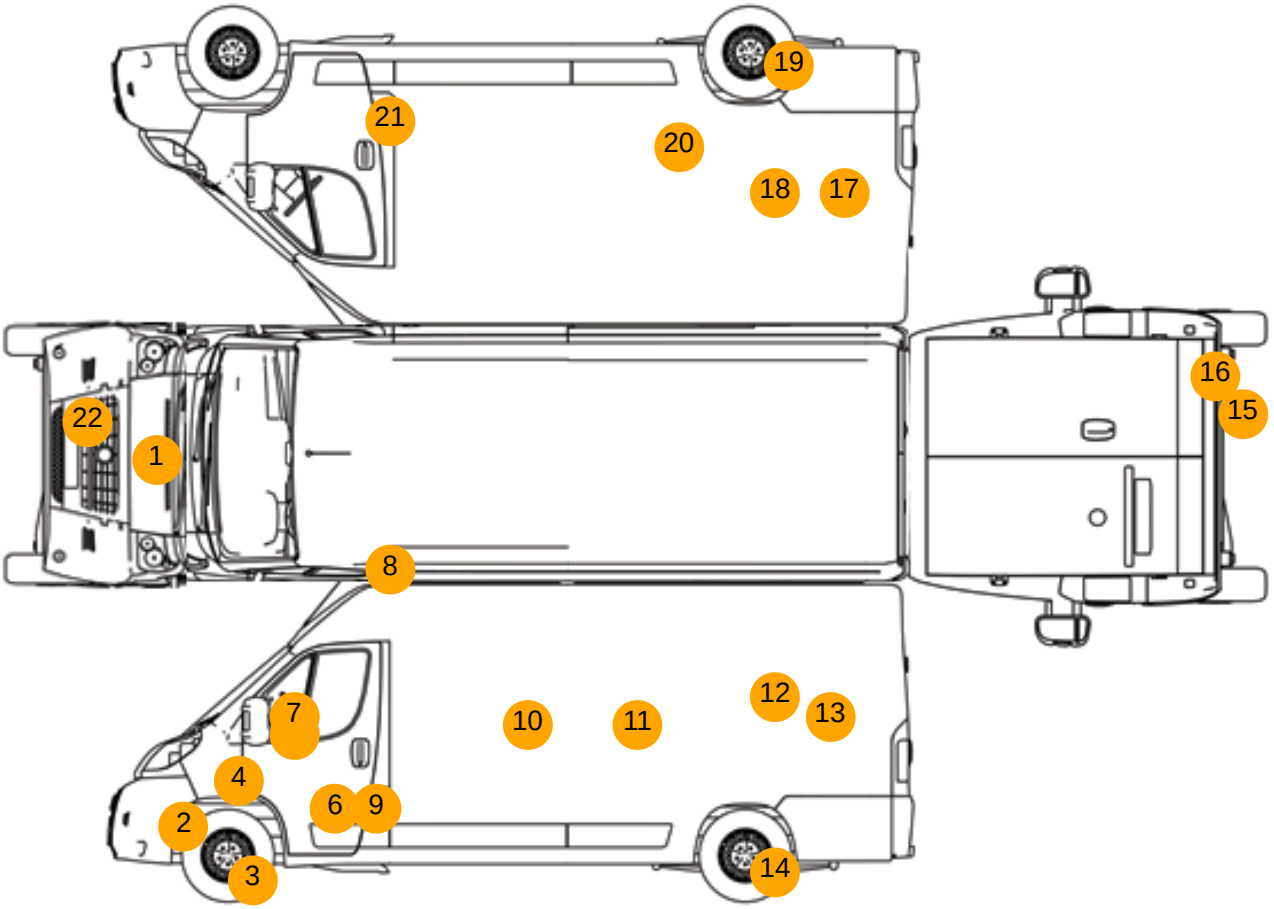

Damage Photos



1: Bonnet
Chipped
Multiple Chips



2: Wing nsf
Scratched
Over 25mm Thru Paint



3: Wheel nsf
Scratched
Over 50mm



4: Wing nsf
Scratched
Over 25mm Thru Paint



5: Door Mirror Assy nsf
Broken
Replace



6: Door nsf
Scratched
Over 25mm Thru Paint



7: Door Mirror Glass ns
Broken
Replace



8: Qtr Panel Moulding ns
Missing
Replace



9: Door nsf
Scratched
Over 25mm Thru Paint



10: Qtr Panel nsr
Scratched
Over 25mm Thru Paint



11: Qtr Panel nsr
Scratched
Over 25mm Thru Paint



12: Qtr Panel nsr
Scratched
Over 25mm Thru Paint



13: Qtr Panel nsr
Scratched
Over 25mm Not Thru Paint



14: Wheel Trim nsr
Missing
Replace



15: Bumper Rear
Scratched
25 to 100mm Thru Paint

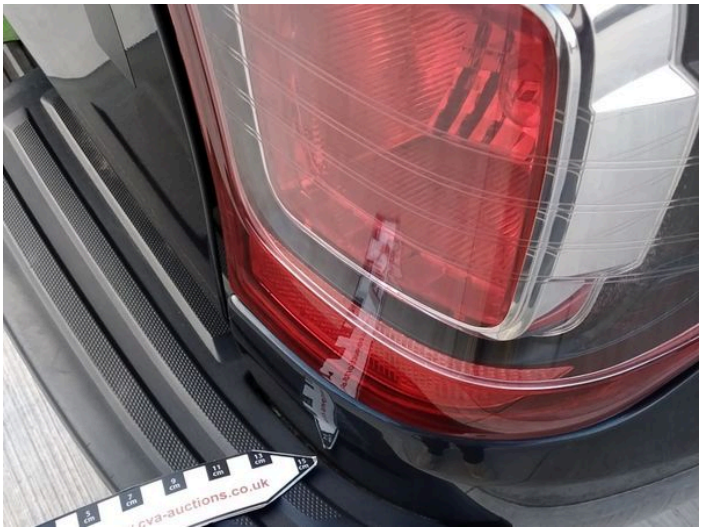

16: Bumper Rear
Dented
Over 30mm



17: Qtr Panel osr
Scratched
UpTo 25mm Thru Paint



18: Qtr Panel osr
Scratched
Over 25mm Thru Paint



19: Wheel osr
Scratched
Up To 50mm



20: Qtr Panel osr
Chipped
Multiple Chips



21: Door osf
Chipped
Multiple Chips



22: Bumper Front
Scratched
Over 100mm Thru Paint

Interior

Carpet Condition	Average	**Upholstery Condition**	Average
Seat Condition	Average	**Odour**	-

Engine Runs	OK	No Excessive Smoking	OK
Brakes	OK		
Parking Brake	OK		
EML light illuminated	OK	DPF light illuminated	OK
Airbag light illuminated	OK		
ABS light illuminated	OK		