COMMERCIAL VEHICLE AUCTIONS LTD
THE UK'S MOST ESTABLISHED COMMERCIAL VEHICLE AUCTIONEERS

Carr Hill Industrial Estate
Doncaster
DN4 8DE
01302 732600 | cva.noreply@cva-auctions.co.uk

VEHICLE INSPECTION REPORT

AK73XND

Ford Transit 300 2.0 EcoBlue 130PS

Inspection

Serious Damage?	No

Vehicle

VAT	Plus VAT
V5	Present
Cap Id	42069
Cap Code	FOTU203SL0VDTM2 1 L

Details

Location	Avonmouth	**GVW**	3000kg	**CAP Average**	£15,500.00
Reg. date	30/11/2023	**Colour**	BLUE	**CAP Below**	£13,350.00
Year	2023	**VIN**	WF0YXXTTGYPT52049	**Gearbox**	MANUAL
Mileage	22,443 Miles Not Warranted	**Body Style**	Panel Van L1	**Gears**	6
		CAP Clean	£16,750.00		
Fuel Type	DIESEL				

WARNING LIGHT ON DASH, AD BLUE, SIDE LOAD DOOR, ROOF RACK, ALLOY WHEELS, E/MIRRORS, HEATED WINDSCREEN

Tyres

NSF	
NSR	
OSF	
OSR	
Spare	

Features

- Bluetooth connection
- Park assist camera
- Air conditioning
- Central locking
- Cruise control
- Rear parking sensor
- Front electric windows
- Cloth seat trim
- Front parking sensor
- Digital radio
- Drivers airbag
- Heated front seat
- USB/iPod interface
- Passenger airbag

Condition Check

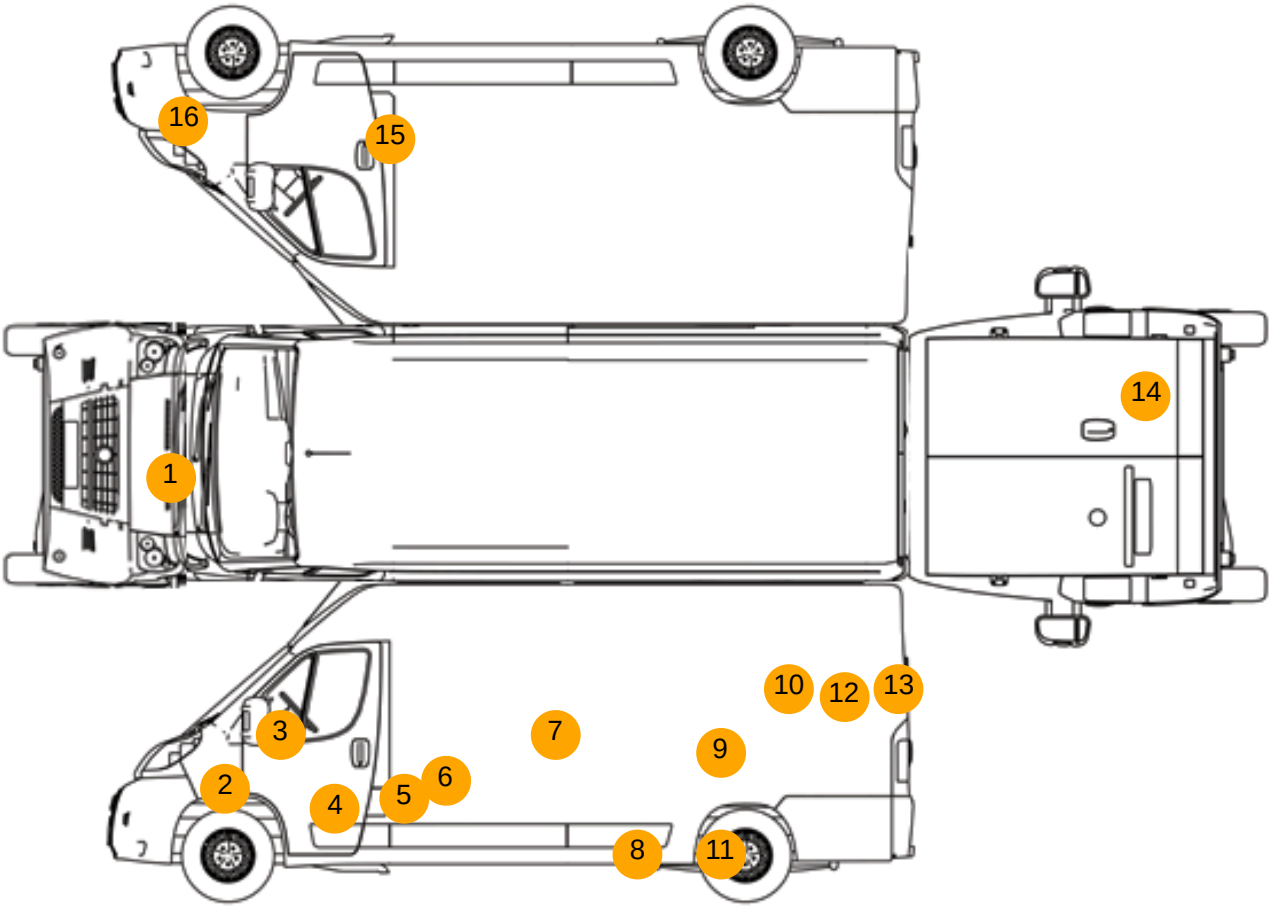

Damage Photos



1: Bonnet
Chipped
Multiple Chips



2: Wing nsf
Scratched
Over 25mm Thru Paint



3: Door Mirror Assy nsf
Scratched (Painted)
UpTo 25mm Thru Paint



4: Door nsf
Scratched
Over 25mm Thru Paint



5: Door nsf
Scratched
Over 25mm Thru Paint



6: Qtr Panel nsr
Scratched
UpTo 25mm Thru Paint



7: Qtr Panel nsr
Chipped
1 To 5



8: Qtr Panel Moulding ns
Scratched (Painted)
Over 25mm Thru Paint



9: Qtr Panel nsr
Scratched
Over 25mm Thru Paint



10: Qtr Panel nsr
Chipped
1 To 5



11: Qtr Panel nsr
Scratched
Over 25mm Thru Paint



12: Qtr Panel nsr
Chipped
1 To 5



13: Qtr Panel nsr
Scratched
Over 25mm Thru Paint

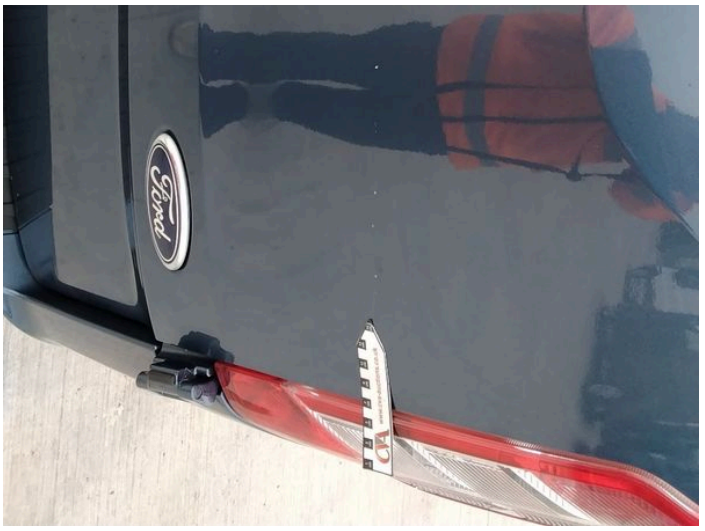

14: Door osr
Chipped
Multiple Chips



15: Door osf
Chipped
Multiple Chips



16: Bumper Front
Chipped
Multiple Chips



17: Dash Warning Lights
Displayed
No Action

Interior

Carpet Condition	Average	**Upholstery Condition**	Average
Seat Condition	Average	**Odour**	-

Engine Runs	OK	Gearbox 1st and Reverse Test	OK
Brakes	OK	Gearbox Static Gear Selection (engine running)	OK
Turbo Boosting	OK	No Excessive Smoking	OK
Parking Brake	OK		
EML light illuminated	Fault	DPF light illuminated	OK
Airbag light illuminated	OK		
ABS light illuminated	OK		