COMMERCIAL VEHICLE AUCTIONS LTD
THE UK'S MOST ESTABLISHED COMMERCIAL VEHICLE AUCTIONEERS

Carr Hill Industrial Estate
Doncaster
DN4 8DE
01302 732600 | cva.noreply@cva-auctions.co.uk

VEHICLE INSPECTION REPORT

CE68EHV

Man TGX 26.460

Non Runner

Inspection

Serious Damage?	No

Vehicle

VAT	Plus VAT
V5	Buyer To Apply
Cap Code	999900

Details

Location	Doncaster	**Colour**	WHITE	**Axle Combi**	6x2
Reg. date	01/11/2018	**VIN**	WMA24XZZXKP116455	**Steering Combi**	Mid-Lift
Year	2018	**Body Style**	Tractor Unit	**Rear Suspension**	Air
Mileage	568,027 Km Not Warranted	**Cab Type**	XLX CAB		
		Gearbox	Automatic		
Fuel Type	Diesel				

BEEN STANDING FOR OVER 12 MONTHS, WARNING LIGHTS ON DASH, SUSPENSION IS INOP OFF ROAD KIT ON FRONT, SLIDING 5TH WHEEL

Tyres

NSF	**NSI1**	**NSI2**	**NSI3**	**NSI4**
OSF	**OSI1**	**OSI2**	**OSI3**	**OSI4**
Spare	**NSO1**	**NSO2**	**NSO3**	**NSO4**
	OSO1	**OSO2**	**OSO3**	**OSO4**

Features

- Bluetooth connection
- Front electric windows
- Cruise control
- Drivers airbag
- Navigation system
- Cloth seat trim
- Air conditioning

Photos












e4*2007/46*0230*
MAN
24XP756
TGX 26460 6X2/2 BLS









Condition Check

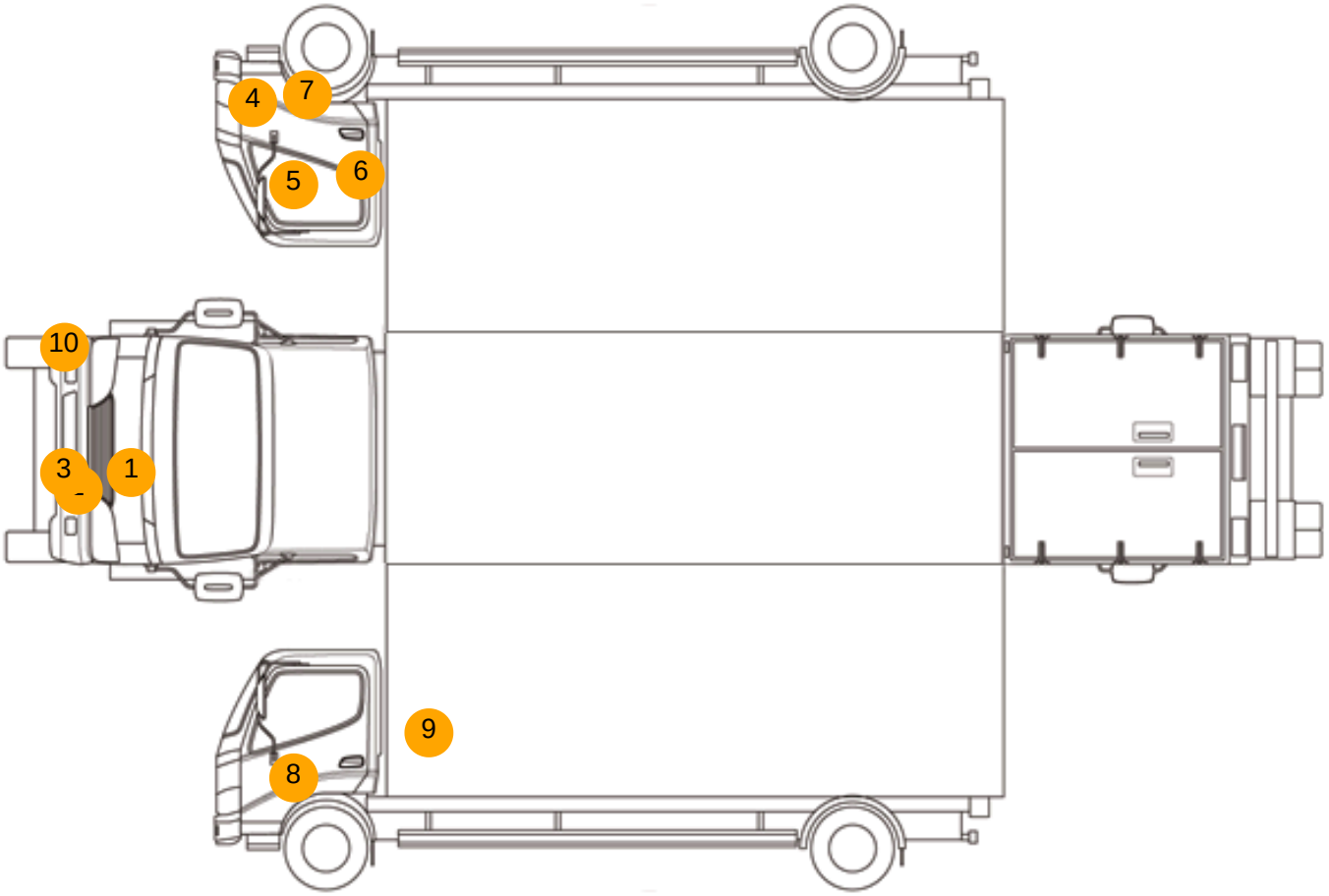

Damage Photos



1: Bonnet
Chipped
Over 5mm



2: Bumper Front
Scratched
Over 100mm Thru Paint



3: Bumper Front Moulding
Broken
Replace



4: Wing osf
Scratched
UpTo 25mm Thru Paint



5: A Post os
Cracked
Replace



6: Door osf
Dented
With Paint Damage



7: Door Moulding osf
Scratched (Painted)
Over 25mm Thru Paint



8: Door nsf
Dented
Over 30mm



9: Qtr Panel nsr
Scratched
Over 25mm Thru Paint



10: Bumper Front
Insecure
Action Required

Interior

Carpet Condition	Average	**Upholstery Condition**	Average
Seat Condition	Average	**Odour**	-

Engine Runs	OK	Gearbox 1st and Reverse Test	OK
Brakes	OK	Clutch Slip Test from Static	OK
Turbo Boosting	OK	Gearbox Static Gear Selection (engine running)	OK
Parking Brake	OK	No Excessive Smoking	OK
EML light illuminated	OK	Oil warning light illuminated	OK
Airbag light illuminated	OK	DPF light illuminated	OK
ABS light illuminated	OK	Service indicator light illuminated	OK
Roof / sunroof	OK	Radio	OK
Windows	OK	Steering	OK
Sat nav	OK		